Employee Involvement, Consultation and Information Sharing in Health and Safety in Construction

William F. Maloney
University of Kentucky
And
Iain Cameron
Glasgow Caledonian University

Report submitted on the work performed under
Engineering Physical Science Research Council
(GR/S25494/01)

September 2003

Summary

Dr. William F. Maloney, Raymond-Shaver Chair Professor of Construction Engineering and Management at the University of Kentucky in the United States, conducted an investigation into Employee Involvement, Consultation and Information Sharing in Health and Safety in Construction while spending a six-month sabbatical leave at Glasgow Caledonian University. The objectives of the study were to

- Develop and validate a model of construction work process planning that identifies opportunities for operative involvement and consultation
- Using this model, assess current industry practice in terms of operative involvement and consultation through interviews with contractor personnel and operatives
- Develop and validate a methodology for the assessment of operative capability in the development of work process plans or method statements
- Evaluate operative capability
- Assess contractor and operative attitudes on operative involvement and consultation in terms of opportunity, capability, and motivation.

The task method statement was selected as the framework for operative involvement. The process of development, implementation, and improvement of the task method statement was detailed in a model that identified three opportunities for operative involvement: (1) the development of a project specific task method statement; (2) review and modification of the task method statement prior to and during performance of the task; and (3) upon completion of the task n an effort to identify opportunities for improvement.

Interviews with contractor personnel and operatives revealed that there is little involvement of operatives in the development of a work plan as evidenced by the task method statement despite the three opportunities identified in the model. There is essentially no involvement in the development of the project specific task method statement or in an effort to improve the generic task method statement upon completion of the task. There is limited operative involvement in the review and modification of the project specific task method statement prior to and during the performance of the task.

Planning simulations were created to use to assess operative capabilities. The results of these simulations revealed that operatives are capable of being involved in the development, implementation, and improvement of task method statements. However, the methodology used in the simulations required operatives to participate in a formalized process with which they were unfamiliar. Discussions with the operatives participating in the simulations found that the operatives were fully capable of addressing tasks, hazards, and risks, but were not accustomed to working with a formal paperwork exercise to do this.

A survey of contractor personnel and operatives was conducted on three projects. Operatives believed that they were more qualified and motivated to be involved in work planning for health and safety than did contractor personnel.

Table of Contents

Table of Figures

Table of Tables

Employee Involvement, Consultation and Information Sharing in Health and Safety in Construction

Introduction

Beginning with legislative efforts in the 1970s, worker involvement and consultation have been advanced as an approach to improving health and safety performance in industrial settings. In the United Kingdom, a series of regulations promulgated by the Health and Safety Executive (HSE) that directly address involvement, consultation, and the sharing of information with regard to health and safety are discussed below.

The Safety Representatives and Safety Committees Regulations 1977

The regulations focus on workers represented by a trade union and provide for the appointment of safety representatives by the workers' union. The union will consider a candidate's experience and length of service with the firm in appointing safety representatives. The individuals appointed may represent a specific site, part of a large site, or more than one site. Safety representatives must be allowed to undergo appropriate training and be permitted to take time off during work hours, with pay, to perform their duties. The functions of a safety representative are:

1. Consultation with the employer
2. Investigation and reporting of significant hazards and dangerous occurrences
3. Investigation of accidents in the workplace
4. Representation on general health and safety matters
5. Reception of complaints by employees
6. Representation with the Health and Safety Executive or other enforcing authority
7. Reception of information from the enforcing authority
8. Attend meetings of safety committees
9. Carry out inspections of the workplace
10. Inspection of documents

Employers must provide pertinent information and consult and provide assistance to safety representatives. If requested by two or more safety representatives, an employer must establish a safety committee.

The Health and Safety (Consultation with Employees) Regulations 1996

Because of the declining proportion of the workforce represented by trades unions, the 1977 regulations did not have the desired impact on employee involvement and consultation on health and safety matters. The 1996 regulations were an effort to provide involvement and consultation for workers without trade union representation. These differ from the 1977 regulations in that they allow for direct involvement between the workers and the employer or for representative involvement whereby groups of workers elect a safety representative. Employers have a duty to consult and must provide pertinent information on health and safety issues. The functions and rights of the employees selected as safety representatives are similar to those of the trade union appointed representatives.

The Health and Safety (Employee Consultation and Representation) Regulations 2003 (Consultative proposals for new regulations on employee involvement and consultation on health and safety

For a variety of reason, the 1977 and 1996 regulations did not achieve the desired effect of widespread and meaningful employee involvement and consultation in health

and safety maters. In April, 2003, the Health and Safety Executive proposed a new set of regulations, which firmly establishes its position on involvement and consultation. The regulations state "There needs to be a forum for all employees to inform the employer of risks they are facing and for these workers to suggest ways to manage these risks" and "…getting the workforce involved at all stages in the decision making on health and safety helps to create an organizational culture which is both supportive and productive." The HSE's stated aim is to "develop new ways to establish and maintain an effective health and safety culture in a changing economy so that all employers take their responsibilities seriously, the workforce is fully involved and risks properly minimized." It is further stated that trade union paradigm safety representatives are the best way to involve the workforce in health and safety.

The 2003 proposed regulations are an effort to harmonize the requirements of the 1977 and 1996 regulations on safety representatives. They state that an employer has a duty to consult with

- A trade union appointed safety representative or
- A safety representative elected using the procedure provided for in the regulations or
- Directly with the workers where no safety representative has been elected.

To facilitate the effectiveness of representation, the employer is required to create identifiable constituencies with representation being provided for each constituency. Safety representatives, whether appointed or elected, have the same rights as provided for in the 1977 regulations.. They must be released from their normal job duties and paid for the time they carry out their functions including receiving training.

The proposed regulations exempt employers with fewer than 20 employees from the requirement for safety representatives, safety committees, and formal arrangements for involvement. Less formal methods are advocated to provide regular contact on a direct basis between employees and employer on health and safety.

<u>The Management of Health and Safety at Work Regulations 1999</u>

These regulations require employers to provide employees with information on the arrangements made to address "serious and imminent danger" and danger areas. Employees should be provided with information on the nature of the hazard and the measures taken to protect the employees from it. Employers must also provide employees with information on:

- health and safety risks identified in the risk assessment process
- the preventive and protective measures established
- emergency procedures
- health and safety risks that have been notified to the employer.

Thus, there is a twenty-five year history of encouraging involvement, consultation, and information sharing in health and safety matters. The results of this effort in terms of actual involvement, consultation, and information sharing have not met the HSE's expectations. As discussed in its 2003 consultation document, the proportion of the workforce represented by trades unions has declined significantly since 1977 thus reducing the opportunity for trades unions to appoint safety representatives. In firms without workers represented by trades unions, the great majority do not have safety representatives either because the employer did not make arrangements for a

representative or was unsuccessful in identifying individuals willing to serve as safety representatives. .

The HSE's emphasis has been on promoting representative involvement and consultation using the trade union model because of the empirical evidence of improved health and safety performance at sites using this approach (Reilly, Paci, and Holl, 1995). However, the 2003 proposed regulations exempt employers with fewer than 20 employees from the requirements for safety representatives. Instead, the HSE advocates direct interaction in these firms between the employer and employees on a regular basis.

Regardless of whether involvement and consultation is obtained through a representative or direct arrangement, it is critical that the analysis of the issue be examined within the context of a model or paradigm.

Employee Involvement/Consultation Framework

In any organization, decisions must be made. There has always been a debate as to who makes the decisions and the roles to be played by the parties making or impacted by the decision. HSE regulations address the issue in terms of involvement and consultation. Webster's dictionary defines involve as to oblige to take part and consult as to ask the advice or opinion of. Participation, to take part, has been widely used ass a synonym. Regardless of the terminology used, the issue within organizations comes down to a manager's use of authority in making and implementing decisions versus the freedom to make decisions exercised by subordinates. This is presented in the continuum shown in Figure 1.

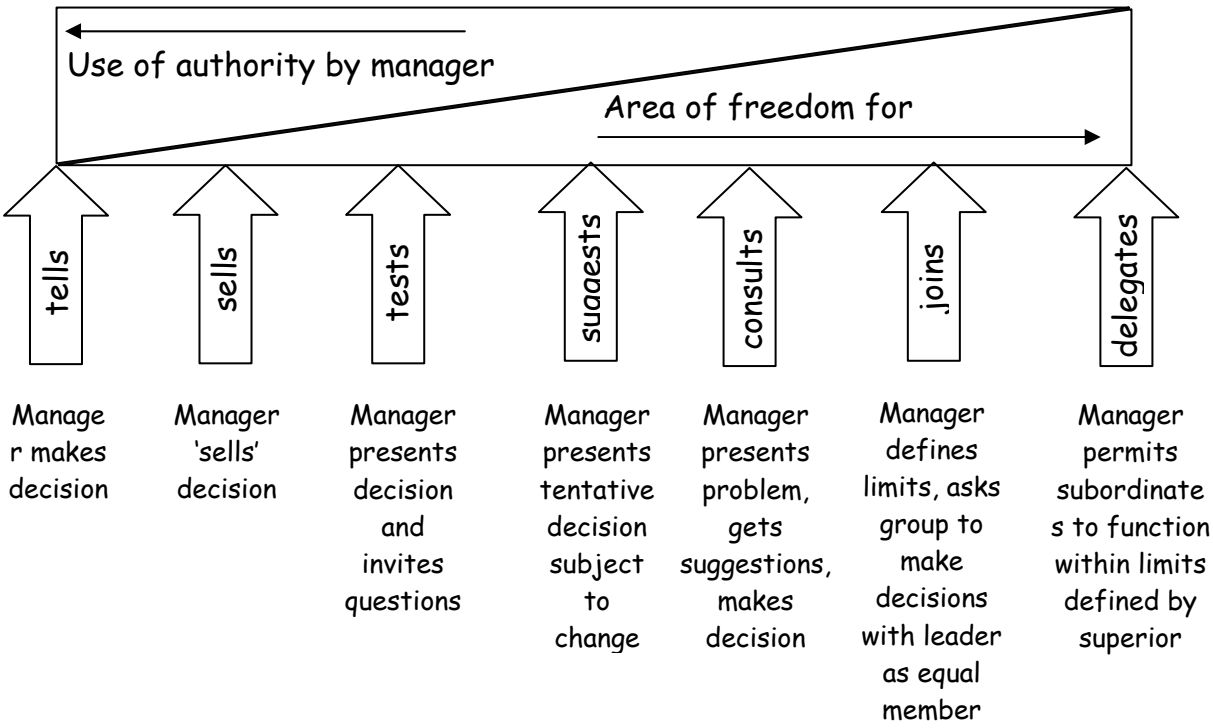

Figure 1 - Managerial Authority vs. Subordinate Freedom

Tannenbaum, R., & Schmidt, W. H.. "How to choose a leadership pattern,". Harvard Business Review, May/June., 1973, beginning on p. 162.

At the left side of the continuum, management has complete authority. The manager makes the decision and implements it without consideration of the individuals charged with carrying it out. At the extreme right side, the manager's subordinates would be allowed to make the decision without consideration of management influencing or overruling the decision. Unless required by unusual circumstances, the best decisions are not made at the extremes of the continuum but rather at some point along the continuum with the specific point determined by the issue, the time allowed to make the decision and efficiency.

The issue or nature of the decision will be the prime determinant of the location along the continuum at which the decision should be made. For example, the decision as to the best production process technology in which to invest £500,000 would be made toward the left end of the continuum after management obtains input from the workers likely to use the technology. Conversely, the decision as to which hand tools would be used by the workers would be made toward the right end.

The industrial setting within which the decision-making, involvement, and consultation are to take place will determine the issues to be addressed and the time allowed for the involvement, consultation, and decision-making. A setting characterized by a relatively stable workforce, unchanging technology, and stable demand for the products produced within the setting will be suited for a particular approach while a setting with a temporary workforce, significant time and cost pressures, and highly variable demand will require a totally different approach.

An examination of involvement and consultation in the construction industry requires the recognition that the industry and its processes are significantly different from other industries. The characteristics of the industry are a major influence on the potential for involvement and consultation.

Construction

Characteristics

To understand the industry, it is critical to understand its characteristics: (adapted from Bryman, et. al., 1987 and Davies and Tomasin, 1990):

- Construction projects have a relatively short, finite duration.
- The stress caused by this short time horizon causes project team members to focus on the present and what has to be accomplished
- There is an external focus on the client and completing the client's project on time.
- There is extensive goal clarification performed, i.e., planning and scheduling.
- There are significant efforts to control performance, which is typically defined in terms of cost and schedule.
- Supervision provides explicit direction as to what is to be accomplished.
- Individuals performing the work may determine how the work is to be done.
- Time pressures dictate managerial decisiveness - delays cannot be tolerated.
- Completion of the project on time determines whether the project organization will be paid and avoid paying damages to the client.

- Productivity determines whether the project organization makes a profit on the project.
- The principal or prime contractor (the contractor with whom the client has a contract) subcontracts approximately 80% of the work on a construction project to specialty contractors.
- Depending on the size of the project, as many as 20 or more different contractors and their employees may be working on a single project site at a time. Because of this, a construction project organization has been described as a temporary, multiorganization (Cherns and Bryant, 1984).
- Consequently, from the perspective of a single contractor, the contractor lacks control of the working environment.
- Because of specialization in the construction trades and contractor organizations, craft worker or operative employment on a specific construction site may be short and transitory.
- There may be a lack of stability in work crews because workers are added to and released from crews as work requirements change in response to project schedules.
- The intense time pressures generated because of the project completion date preclude extensive, formal socialization opportunities at which organization policies and procedures may be examined.
- There are significant differences in the complexity, diversity, and size of construction organizations.

These characteristics influence the potential for involvement and consultation through their impact on employment and employment conditions in the industry:

- Employment on a construction project is
    - for a finite duration and, therefore, temporary
    - variable in response to the project schedule
- As a consequence, there are several identifiable manpower flows as workers attempt to maintain full employment
    - From project to project for a single employer
    - From one contractor to another contractor in a single community
    - From a contractor in one community to a contractor in another community
    - From a non-construction organization that employs construction craft workers (An example would be a university's physical plant department that employs carpenters) to a contractor or other organization
- There are differences in the employment arrangements
    - Direct hire – permanent
    - Direct hire – temporary
    - Agency or labour only subcontractor hire
    - Self-employed or independent contractor
- There are differences in the method of compensation
    - Time based wage (hourly, daily, or weekly)
    - Piece or unit rate
    - Fixed price
    - Time based + bonus

In addition to these employment issues, the multiemployer nature of the construction project site creates potential problems for improving safety and health through participation. On the typical construction project site you have

- *N* contractors with n safety cultures/climates
- A common situs – multiple contractors must access the same work space with no single contractor having control of the site
- Potentially significant interface problems

In recognition of the multiemployer nature of a construction site, the HSE issued an industry specific set of regulations that do not specifically address the issue of involvement and consultation, but that do recognize the process of involvement and consultation between workers and the individual trade contractors.

The Construction (Design and Management) Regulations 1994

The CDM regulations establish requirements for the principal contractor on a construction project to coordinate the views of contractors consulting with their own employees or safety representatives on the project. The arrangements for this coordination must be set forth in the construction phase health and safety plan that must be completed prior to work beginning on the project.

These arrangements must be consistent with the primary regulations on involvement and consultation discussed above, but must also address the diversity of employment practices on the construction site including direct hire, agency hire, and self-employment as well as contracting practices in terms of contractors and subcontractors and the nature and duration of the work activities of each. The arrangements must facilitate the parties' duty to provide the principal contractor with the information required to develop the construction phase health and safety plan.

The CDM regulations thus address:

- The multiemployer nature of the construction project
- The role of the principal contractor in preparation of the construction phase health and safety plan
- The duty of the individual trade contractors to provide the principal contractor with information and method statements on the work activities they will undertake
- Involvement and consultation by operatives with their trade contractors
- The requirement by the principal contractor to coordinate the involvement and consultation of operatives between the trade contractors and to encourage this involvement and consultation
- The principal contractor's duty to provide training for the workers on the site

Administration of Work

One of the characteristics of construction work identified above is that individuals performing the work may determine how the work is to be done. To understand the implications of this characteristic fully, it is critical that it be examined within a paradigm of work administration. In a comparative examination of the administration of work in manufacturing (bureaucratic organization) with that in construction (craft organization), Stinchcombe (1959) states "Mass production may be defined by the criterion that *both* the product and the work process are planned in advance *by persons not on the work crew*." In the construction craft organization, the architect

and/or engineer define the product while the craft workers who will perform the work plan the work process, including the following elements:

- The location at which a particular task will be done
- The movement of tools, of materials, and of workers to this work place, and the most efficient arrangement of these workplace characteristics
- Sometimes the particular movements to be performed in getting the task done [*This would include how to perform the task safely* (emphasis added)]
- The schedules and time allotments for particular operations
- Inspection criteria for particular operations (as opposed to inspection criteria for final products)

Stinchcombe further states, "In construction all these characteristics of the work process are governed by the worker in accordance with the empirical lore that make up craft principles. These principles are the content of the workers' socialization…"

The decision-making regarding each of the elements identified by Stinchombe may be analysed in terms of the Tannenbaum & Schmidt continuum

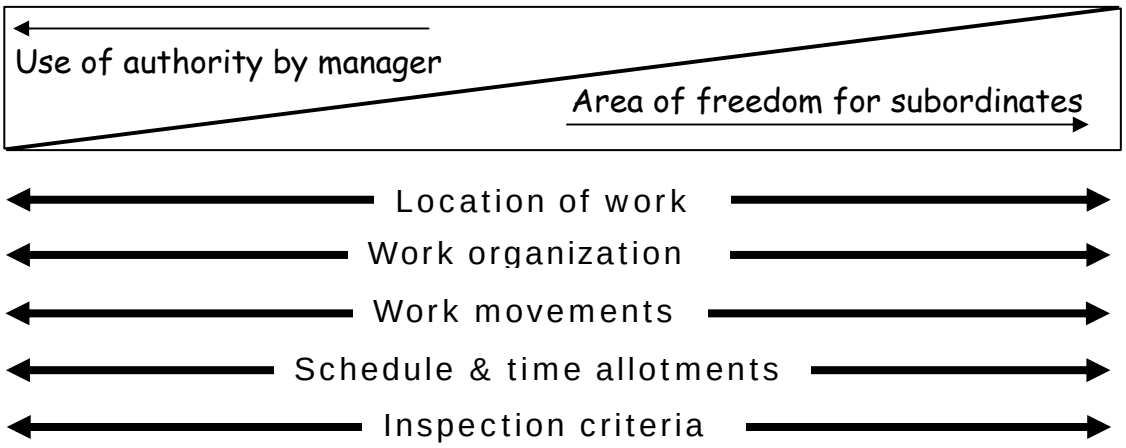

Figure 2 - Administration of Work Issues vs. Locus of Decision-making

The particular point on the continuum at which the decision will be made for each element will vary considerably between contractors and between projects. The nature of the project in terms of the work required, the technology to be employed, the attitudes of the contractor, the capability of the workforce, the time allowed, and numerous other factors will influence the locus of decision-making.

Organizational Culture and Subcultures

A significant factor in determining the locus of decision-making is the culture of the contracting organization. The project organization, even though it exists for a finite period of time, develops its own culture. Schein (1996) defines culture as "…a set of basic tacit assumptions about how the world is and ought to be that a group of people share and that determines their perceptions, thoughts, feelings, and, to some degree, their overt behavior." He observes that culture manifests itself at three levels:

- the level of deep tacit assumptions that are the essence of the culture
- the level of espoused values that often reflect what a group wishes ideally to be and the way it wants to present itself publicly

- *the day-to-day behaviour that represents a complex compromise among the espoused values, the deeper assumptions, and the immediate requirements of the situation*. (Emphasis added)

A somewhat less complicated view of culture is that it is simply "the way we do things around here."

Organizational culture and its impact on organization performance have been of interest to researchers for the past two decades. The literature on organizational culture focuses on the culture of the overall organization. However, this may obscure significant differences between sub-cultures in the organization. In his review of corporate or organizational culture, Cooper (2000) observes, "… although an organization may possess a dominating 'cultural theme', there are likely to be a number of variations in the way in which the theme is expressed throughout the organization." Schein (1996) observes that organizations may have three distinct cultures among its subcultures:

- "operator culture"
- "engineer culture"
- "executive culture"

He argues that a distinction must be made between cultures that arise *within* organizations from the unique experiences of its members from those that arise outside of the organization whereby the shared assumptions derive from a common educational background, the requirements of a given occupation, and the shared contact with others in the occupation.

Schein asserts that the executive and engineering cultures arise, to a major degree, from outside the organization because executives and engineers are members of occupational communities. For engineers, the shared assumptions are based on common education, work experience, and job requirements. For executives, the assumptions result from the executive's focus on maintaining the financial survival and growth of the organization and association with others facing the same challenges.

In contrast, Schein postulates that the operator culture arises from within an organization because the technology and work processes employed by the organization are specific to that organization. Workers for Company A performing a particular job rarely have the opportunity to interact with a worker from Company B performing the same job utilizing the same technology and work processes. The opportunity for sharing is minimal and, thus, the operator culture is local.

His assumptions that underlie the three subcultures are presented in Table 1:

<u>Operator Culture</u>

- Because the action of any organization is ultimately action of people, the success of the enterprise depends on people's knowledge, skill, learning ability, and commitment.
- The required knowledge and skill are "local" and based on the organization's core technology.

- No matter how carefully engineered the production process is or how carefully rules and routines are specified, operators must have the capacity to learn and deal with surprises.
- Most operations involve interdependencies between separate elements of the process; hence, operators must be able to work as a collaborative team in which communication, openness, mutual trust, and commitment are highly valued.

Engineering Culture

- Engineers are proactively optimistic that they can and should master nature.
- Engineers are stimulated by puzzles and problems and are pragmatic perfectionists who prefer "people free" solutions.
- Engineers are safety oriented and over-design for safety.
- Engineers prefer linear, simple cause-and-effect, quantitative thinking.

Executive Culture

- Executives focus on financial survival and growth to ensure returns to stockholders and to society.
- Financial survival is equivalent to perpetual war with one's competitors.
- Organization and management are intrinsically hierarchical; the hierarchy is the measure of status and success and the primary means of maintaining control.
- The organization must be a team, but accountability has to be individual.
- The willingness to experiment and take risks extends only to those things that permit the executive to stay in control.
- Because the organization is very large, it becomes depersonalized and abstract and, therefore, has to be run by rules, routines (systems), and rituals ("machine bureaucracy").
- The inherent value of relationships and community are lost as the executive rises in the hierarchy.
- The attraction of the job is the challenge, the high level of responsibility, and the sense of accomplishment (not the relationships).
- The ideal world is one in which the organization performs like a well-oiled machine, needing only occasional maintenance and repair.
- People are a necessary evil, not an intrinsic value.
- The well-oiled organization does not need people, only activities that are contracted for.

Table 1 - Subculture Assumptions

Construction Worker or Operative Subculture

The construction industry constitutes an exception to the belief that the operator culture is local. Unlike manufacturing (upon which Schein's conceptualization appears to be based) and many other industries, in which technology is constantly changing and varies between firms in the same industry, technology in construction is relatively stable and there is little variation in the technology employed by firms in the industry. Consequently, craft workers can move from employer to employer with little or no learning curve to experience.

Craft workers acquire their knowledge, skills, and abilities through a combination of off-the-job training such as technical and/or vocational schools, apprenticeship

programs, military training, etc. and on-the-job training working under the direction of skilled, more experienced workers on a series of projects for one or more contractors. In addition, through this technical socialization process, the budding craft worker learns the customary ways of doing things; how much to produce; how to dress, behave, communicate, etc; and basic beliefs about the craft through interaction with other members of the same craft (Haas, 1972, 1974, & 1977 and Riemer, 1975, 1976, 1977, & 1979). Riemer (1979) examines the life of construction workers with a particular focus on the socialization process by which an individual becomes a construction craft worker. This process begins early for many individuals because of family ties to the industry, continues through school and pre-industry training, formal off-the-job training, and day-to-day on-the-job training. It culminates in the worker fully identifying himself as a construction craft worker with the craft being very specific such as carpenter or electrician.

Thus, a construction craft worker would appear to be a member of a group that:

- Undergoes a significant socialization process to become a member
- Acquires a set of skills and technological capabilities necessary to perform a set of tasks that are readily transferable between employers
- Constitutes an area pool of labour from which employers draw based on need
- Has a relatively transient employment relationship with any specific employer
- Possesses a strong culture

These are characteristic of a occupational community, which Van Maanen and Barley (1984) define as

> a group of people who consider themselves to be engaged in the same sort of work; who identify (more or less positively) with their work; who share a set of values, norms, and perspectives that apply to, but extend beyond, work related matters; and whose social relationships meld the realms of work and leisure

Craft workers are, therefore, one of three occupational communities influencing culture, behaviour, and performance on a construction project.

Occupational Communities

Members of occupational communities may be self-employed or may work for an organization. When employed within an organization, the culture of an occupational community is a significant factor in the effectiveness of the performance of its members. A critical cultural issue is that of control of the work process. Van Maanen and Barley (1984) have observed that:

- Occupational communities are premised on the belief that only the membership possesses the proper knowledge, skills, and orientations necessary to make decisions as to how the work is to be performed and evaluated.
- Self-control refers to the occupational community's ability to dictate … how the content and conduct of a member's work will be assessed.
- …self-control is problematic to members of an occupational community only when organizational officials seek to impose certain "outsider" standards, goals, work tasks, evaluative schemes, and so forth upon the membership. In and of itself, hierarchy is not an issue. It is the use of hierarchical authority to direct member activities in ways the membership considers untoward that presents the problem and threat to self-control.

Construction Project Organization-Occupational Community Interaction

A contractor's project organization consists of two categories of employees: those with a relatively permanent attachment to the contractor and those with a temporary attachment, typically the life of the project. Individuals with a permanent attachment to the contractor influence and are influenced by the prevailing culture of the contractor's core organization. This culture reflects the subcultures of the executives and engineers of the firm. There may be small variations between the cultures of each of the contractor's projects, but there is a prevailing culture for the contractor's overall organization.

Craft workers are the primary individuals with a temporary attachment to the contractor's project organization. They are members of an occupational community that has its own culture, however strong. The degree of integration between the contractor's project organization's culture and that of the occupational community will vary depending on the nature of the relationship between the contractor's organization and the occupational community as shown in Figure 3.

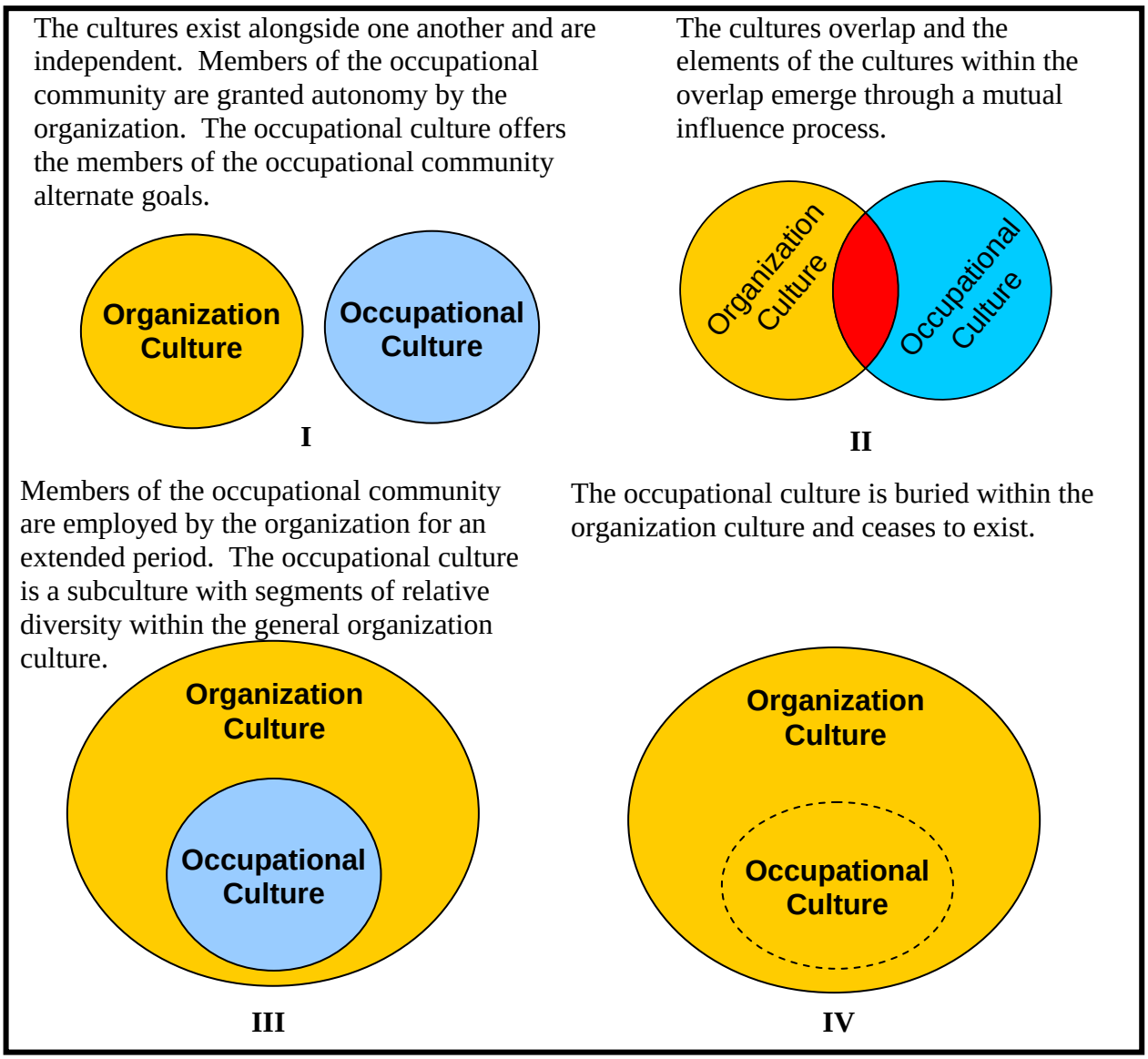

Figure 3 - Organization-Occupational Community Culture Integration

Case I occurs when a worker or organization is hired as an independent contractor. No effort is made to influence the independent contractor's performance of the work. This individual is allowed to make all work-related decisions. Case IV occurs when the members of the occupational community are hired permanently by the contractor and, after a period of time, the culture of the occupational community is subsumed by that of the contractor's organization. The resultant culture is a function of the reciprocal influences of the cultures of the contractor organization and the occupational community upon one another. Case II occurs when the contractor hires a member of the occupational community. The longer this employment relationship continues, the greater the overlap of the cultures until Case III occurs as the culture of the occupational community exists as an identifiable element of the culture of the contractor's organization. As the employment relationship continues, the two cultures merge and the culture of the occupational community disappears, which is Case IV.

The typical situation in construction is that of Case II. A contractor hires one or more craft workers who are members of an occupational community to work on a project for a relatively short, finite period. If one accepts the idea of culture as "The way we do things around here," there may be two distinct cultures co-existing on the project: the prevailing culture of the contractor organization and that of the craft worker community. Each may have its own way of doing things. Through a process of negotiation or mutual influence an overlap of cultures is obtained such that there is an agreement between the contractor organization and craft worker community on specific issues. On other issues, the contractor organization and craft worker community retain their own culture and way of doing things.

Case III arises when a group of craft workers are employed on long-term basis by a single organization. The degree of integration increases as the scope of issues addressed by the occupational community's culture decreases. There are still identifiable differences between the two cultures. Over time, Case IV is the end result. The two cultures totally merge and are indistinguishable. Which case emerges is a function of the nature of the employment relationship between the organization and members of the occupational community, the length of the employment, and the degree of autonomy and independence granted members of the occupational community by the organization.

It is important to understand that integration is a process of mutual influence. The members of the occupational community influence the contractor organization and vice versa. The actual culture on a project emerges from this mutual influence process. Thus, it is more meaningful to focus on the emergent culture than it is on either the contractor organization's culture or the occupational community's culture. However, to understand the emergent culture it is crucial to understand the cultures involved in the mutual influence process. Schein (1996) believes that many organization problems arise because of the lack of understanding by the members of each of each subculture of the other subcultures.

To illustrate this integration, Figure 4 focuses on the issue of task. The identification of specific work tasks to be performed and the planning of those tasks is an appropriate topic for the project organization's production planning system. At the same time, the craft workers employed by the contractor, as a result of their socialization process to the occupational community, believe that task planning is their responsibility. As discussed previously, the craft worker occupational

community believes that its members should make the decisions regarding all aspects of the task with the possible exception of the technology

If we assume that there are several possible approaches to performing the task, there are three potential scenarios for this interaction:

1. The contractor, through his/her production planning system, may determine the approach.
2. The contractor may defer to the craft workers and allow them to determine the approach.
3. The contractor and craft workers may jointly determine the approach.

The scenario employed will depend, to a certain extent, on the relative strengths of the organization and occupational cultures.

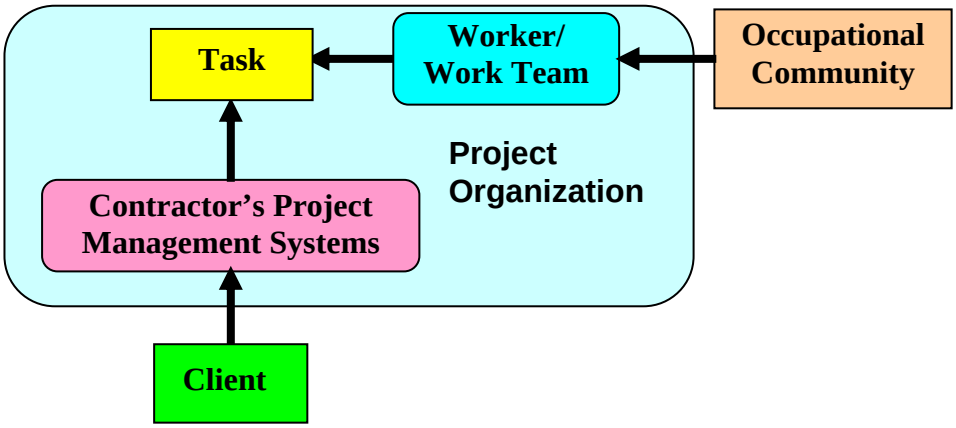

Figure 4 - Contractor Project Management System - Occupational Community Intereaction

The occupational community and the contractor's client are potential external influences on this process. If the occupational community has strongly held beliefs on how a particular task should be performed, it members may resist any efforts by the contractor to dictate work methods, including safety requirements. Some clients, especially those in the process plant industry, require contractors to utilize specified approaches for work in particular situations, such as in existing facilities.

Stinchombe's characterization of craft vs. bureaucratic work systems was published in 1959. The tenets of craftwork that he presents are fundamental to craft workers constituting an occupational community. Since his work, there have been two forces significantly influencing the construction industry: (1) the erosion of market share and decline of the construction craft unions and (2) the industrialization of the construction process.

At the time of Stinchombe's work, members of the construction trade unions performed most of the construction work in the United Kingdom. Today, the figure is closer to 10%. Consequently, fewer construction workers are entering the industry through union sector apprenticeship programs. There is a perception that the quality of the construction workforce has decreased and that the overall quality of the average construction worker is lower today than it was in the 1950s. Given this, are construction workers today qualified to make decision about the performance of work? Is the craft model analyzed by Stinchcombe still valid?

The industrialization of the construction process is a manifestation of the engineering subculture identified by Schein. Industrialization reflects efforts to improve performance and minimize variability in the production process by standardizing the production process, reducing the discretion of craft workers, and reducing the work of craft workers in the field. Prefabrication and modularization are two of the techniques employed in the industrialization of construction. These processes result in the product and the work process being designed and planned by someone other than the individuals performing the work, i.e., the bureaucratic administration of work. The assembler has replaced the craft worker.

The Tannenbaum and Schmidt continuum can be adapted to reflect the varying degrees of involvement and participation as presented in Figure 5. The actual location along the continuum will be determined by the culture of the contracting organization and the nature of the project.

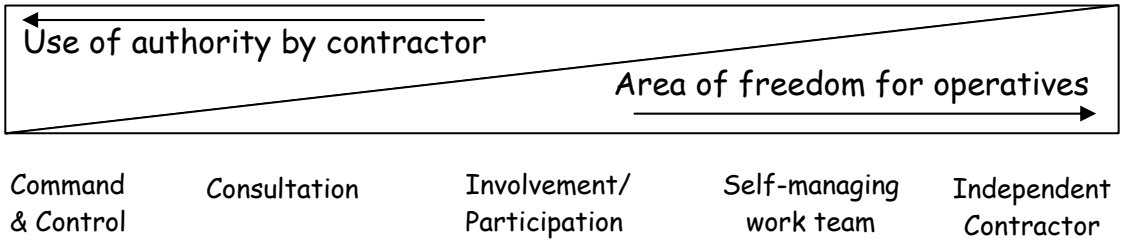

Figure 5 - Adapted Decision-making Continuum

Culture and Involvement and Participation

The nature of worker involvement and participation in an organization will be determined by the culture that emerges from the interaction of the various groups or occupational communities present within the organization. The relative strengths of these communities will significantly influence involvement and participation because, as Van Maanen and Barley state (1984), "Occupational communities are premised on the belief that only the membership possesses the proper knowledge, skills, and orientations necessary to make decisions as to how the work is to be performed and evaluated." Thus, the congruence between the assumptions of the various communities will be a determining factor in the emergence of a model of worker involvement and participation for an organization.

Table 1 presented the assumptions of the operator, engineer, and executive subcultures identified by Schien (1996). These can be paraphrased to illustrate the potential conflict between the subcultures in terms of the appropriate nature of involvement and participation.

Operators/Operatives

- The success of an organization depends upon the capabilities and commitment of the people doing the work.
- The best designed systems do not always work as planned so the people in the system must be prepared to handle the surprises that arise.
- Operations are characterized by interdependencies, which require the people in the system to develop relationships with one another if the operations are to be efficient and effective.

These can be summarized as the success of an activity is dependent upon well-qualified, motivated people who are prepared to deal with unanticipated situations and who work as a collaborative team.

Operators are the best persons to make work process decisions.

Engineers

- We can analyze, plan, and design systems that produce specified outcomes with certainty.
- We do this by minimizing the discretion of the human element in the system, i.e., people are nothing more than programmed machines.

Engineers believe that they know best and they can design systems that produce desired output with little variability by minimizing the freedom of people in the sytem.

Engineers are the best persons to make work process decisions.

Executives

- We must stay in control.
- People are a necessary evil with whom we must work.

Executives focus on control as the means to ensuring the financial success of their organization. As long as they can remain in control, executives will allow subordinates freedom in making decisions.

Executives believe that as long as they control the outcomes others can make work process decisions.

Thus, the nature of involvement and participation in a specific organization will be a function of the interaction between the three subcultures; the perceptions of the executives (managers) of the situation and the people within it; and the capabilities and desires of the operatives who are to do the work.

Involvement Paradigm

Involvement is a behaviour about which people make a conscious choice. A person can decide to be involved or choose not to be involved. As such, the critical questions are (1) what are the factors that influence a person's decision as to whether or not to become involved and (2) how do those factors influence that decision. This issue can be examined in the context of the following relationship:

$$\textbf{Involvement} = f(\textbf{Opportunity, Capability, Motivation})$$

Involvement is a behaviour characterized by taking part in a process that includes activities such as evaluating a situation, analyzing alternatives, selecting a preferred alternative, providing feedback, etc. In terms of the Tannebaum and Schmidt continuum, there is no involvement by workers in the decision making process at the extreme left end of the continuum. The manager exercises his/her authority, makes the decision, and conveys the decision to employees who are charged with implementing it.

As you move from the left end toward the right end, the degree of employee involvement increases and the expectation for the employees is to move from a reactive to a proactive perspective. Instead of being asked to react to a proposed managerial decision, employees are asked to formulate their own proposal. Except at the extreme left end of the continuum, employees are presented with two questions:

- Do I get involved?
- If I do, to what degree do I get involved?

In answering these questions, a person must address the factors of opportunity, capability, and motivation. The relationship between these factors is presented in Figure 6. To decide whether to get involved in something, an employee will ask the questions presented in the figure.

Opportunity

To be involved, a worker must have the opportunity to be involved. Only management can create the opportunity for worker involvement. Management's creation of opportunity is a function of management's beliefs in (1) the role of management and who should make decisions, (2) the capability of workers to make a serious contribution to the matter at hand, and (3) the desire of workers to be involved. For management to create involvement opportunities, it must believe that it should not unilaterally make decisions; that the workers potentially to be involved have the qualifications in terms of education, training, and experience to be effective and make a serious contribution to the decision making process; and that the workers who could potentially be involved have the desire to be involved. Only then will involvement opportunities be created. Thus, it is management's beliefs and perceptions that create involvement opportunities.

Although management's creation of involvement opportunities is necessary for worker, it is not sufficient in and of itself to initiate involvement. It is crucial that the workers perceive that there is the opportunity for involvement. Workers are too intelligent to be fooled for very long and are very good at detecting hypocrisy. A manager who solicits involvement and then completely disregards any information

provided is not serious about involvement. He simply creates the illusion of involvement. This is analogous to the cartoon of the suggestion box with no bottom such that any suggestions submitted drop directly into the trash basket. A person's perceptions of a situation determine that person's behaviour in the situation. Unless workers perceive that management is serious about obtaining worker involvement the workers will not elect to get involved.

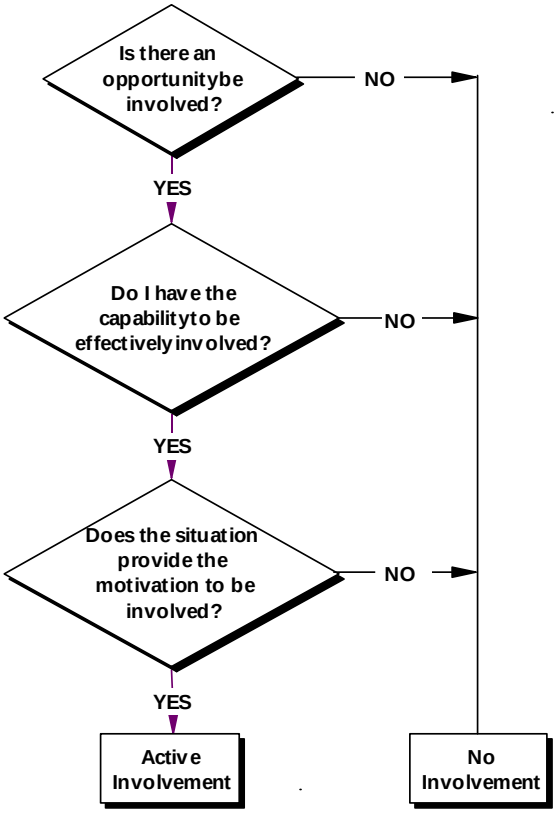

Figure 6 - Involvement Decision-making Flowchart

Capability

Just as with opportunity, capability must be addressed in terms of the perceptions of the manager considering the creation of involvement opportunities and the perceptions of the workers considering whether to become involved. Capability refers to a person's possession of the knowledge, skills, and abilities pertinent to a specific task. For example, a manager is evaluating the purchase of a new welding machine that would be used by welders to fabricate pipe supports. Before he makes this decision, he would like to obtain an evaluation by workers who would use the machine. He goes into the shop and the only workers present are ones who would install the pipe supports, not fabricate them. None of these workers are welders. The manager would most likely perceive that the available workers do not have the necessary capabilities to provide a serious evaluation of the proposed machine. Therefore, he would not create the involvement opportunity. His perception of the workers' capabilities relative to the issue causes him to forego the creation of an involvement opportunity.

Similarly, the workers' perceptions of their own capabilities relative to the issue will influence their decision to get involved in the issue. If people do not believe that they have capabilities that are pertinent to an issue, they will not want to get involved with that issue. A potential safety problem encountered by electricians is connecting new electrical circuits into an existing electrical grid. A group of joiners, when approached by a contractor and asked their opinion as to how to minimize this problem, will most likely decline because they don not have the necessary capabilities. Conversely, the response when asking a group of electricians will be very different. Thus, the workers; perceptions of their capabilities relative to the issue influence their decision whether to get involved.

Capability is developed through observation, formal and informal training, education, and experience. It can be assessed by reviewing certificates obtained through the completion of training courses or programs, programs such as the Construction Skills Certification Scheme, and formal assessment. Managerial perceptions of capability are based upon external assessments such as these and observation and interaction. Worker perceptions are based upon their assessment of the issue and their knowledge, skills, and abilities.

Motivation

Motivation must be considered in relation to a behaviour because it addresses the desire or willingness to engage in that behaviour. The question of motivated to do what must always be considered. Because motivation is intangible, we must look for evidence of motivation and the best evidence of motivation is effort. The expenditure of mental and physical effort is the evidence of motivation. The greater the effort expended, the greater the motivation. Motivation is a function of the workers' belief in what he will obtain in expending the effort and as a result of the effort. A runner may be motivated to run because he perceives that he burns calories and gets in shape while running and wins medals as a result of his running.

As with opportunity and capability, perception is critical. A manager will only create an involvement opportunity if he perceives that workers will be motivated to be involved. If he doesn't believe that they will be motivated to become involved, he won't create the opportunity. Similarly, workers will not want to be involved unless they perceive that there is something in it for them. If they perceive that they will get something during or as a result of their involvement, they will be motivated to be involved. This is a crucial issue.

What can a worker believe he will get as a consequence of his involvement? There are many things beginning simply with the interaction with the others involved and the knowledge that can be gained. They can also gain respect from their peers and managers, which could lead to enhanced employment opportunities. These are all positive consequences. Are there potentially negative consequences to involvement?

In the discussion of the characteristics of the construction industry above, mention was made of the compensation approaches used in the industry. Two of these are production based. Payment based upon the number of units completed is a system designed to maximize earning by motivating workers to increase their productivity. Payment of a fixed sum for completion of a specified scope of work also serves to motivate workers to increase productivity in order to shorten duration. The sooner the

specified scope of work can be completed, the sooner the worker can move onto another work package and, thereby, earn more money. Involvement requires that the worker divert his time from producing to being involved. This results in a loss of income and creates a disincentive to involvement. For a worker to be motivated to be involved, he must perceive that the benefits to being involved are greater than the costs of involvement.

A factor that will influence motivation is the subordinates' role perception. Some workers believe that there is a management role and a worker role: it is the manager's role to make decisions and the worker's role to comply and execute the commands. Individuals with this role perception will not be interested in being involved.

The decision to become involved comes down to perceptions:

- If a manager perceives that his subordinates have a role to play in the consideration of an issue, that they have the capability to make a contribution, and have the desire to be involved, he will create an opportunity for them to be involved.
- If the worker perceives that there is an opportunity to be involved in the consideration of an issue, that he has the capability to evaluate and make a contribution on the issue, and that he gains something from his involvement, he will elect to be involved.

Despite significant efforts by the HSE and contractors to improve its health and safety performance, the construction industry continues to be one of the most dangerous. In 2001/2002, 79 (20 of which were self-employed) workers were killed on construction sites in the UK. In addition, there were 3,959 non-fatal major injuries and 9,013 injuries requiring an absence from work of more than three days. Operative involvement and participation in safety and health decision-making may have the potential for improving safety and health performance.

Research Design and Methodology

The work reported in this study was undertaken by Prof. William F. Maloney, the Raymond-Shaver Chair Professor of Construction Engineering and Management at the University of Kentucky in the United States, during a six-month sabbatical leave at Glasgow Caledonian University. Dr. Iain Cameron and the University applied for and received a grant from the Engineering Physical Science Research Council (GR/S25494/01) for a Visiting Fellow to support Dr. Maloney's work during his sabbatical.

Objectives and Activities

Because of the limited time and limited budget, the study was designed as an initial exploration of the potential role of operatives in planning for health and safety in the construction industry. The activities and objectives of the study were to:

- Establish an advisory group of industry experts to provide guidance to Dr. Maloney during the conduct of the study
- Develop and validate a model of construction work process planning that identifies opportunities for operative involvement and consultation
- Using this model, assess current industry practice in terms of operative involvement and consultation through interviews with contractor personnel and operatives
- Develop and validate a methodology for the assessment of operative capability in the development of work process plans or method statements
- Evaluate operative capability
- Assess contractor and operative attitudes on operative involvement and consultation in terms of
    - Opportunity
    - Capability
    - Motivation

Data Collection

Because of budget and time limitations, it was decided that the study would focus on a single, major contractor working throughout the United Kingdom. This would minimize variation between project processes. Three large, diverse projects were selected, two in the London area and one in Scotland. The projects involved construction of a corporate headquarters, a large research facility, and a series of airport facilities and all three were valued in excess of £200 million. The decision to focus on a single contractor and large projects was made to provide the greatest flexibility in terms of the availability of work processes during the study period and the willingness of the contractor to participate in the study.

Data collection consisted of the following:

- Conduct of a planning simulation to assess operative capability in which teams of contractor personnel and teams of operatives were asked to prepare the basics of task method statement for a specified activity
- Interviews with the planning exercise participants regarding their perceptions on operative involvement in terms opportunity, capability, and motivation
- Administration of a survey to all contractor personnel and operatives on the project site to assess their perceptions on operative involvement in terms opportunity, capability, and motivation

Project Advisory Group

To ensure that the project addressed the concerns of the various parties involved in a construction project, a broad-based advisory group was established consisting of the following individuals:

Contractor Company Level Official
Martin Lalley
Ogilvie

Contractor Project Official
Alasdair Fernie
Balfour Beatty Construction

Contractor Company Safety Official
Brian Hume
Balfour Beatty

Contractor Project Safety Official
Patrick Hanley
MACE

Construction Safety Consultant
Frazer Adrain
Adrain Safety Management Ltd

HSE Construction Representative
John Shelton

Trades Union Official
Alan Ritchie, UCATT

Task Method State Development, Implementation, and Improvement Process

One objective of the study was to identify opportunities for operative participation in the planning and conduct of construction work processes. To that end, the flowchart presented in Figures 7-12 was developed. It represents an idealized perspective on the planning, execution, and improvement of a work process and is divided into three phases:

- Phase I – Development of a project specific task method statement
- Phase II – Implementation or execution of the task method statement
- Phase III – Analysis and improvement of the task method statement

The elements of the flowchart are numbered and each element is identified and discussed in Table 2.

The critical issue in each phase is the existence of opportunities for operative participation in the process.

- Phase I occurs prior to the start of work and, typically, before the contractor has hired most of the operatives who will work on the project. Opportunities for operative participation may be limited. However, some contractors provide relatively permanent employment for a core group of operatives that provide knowledge and leadership in the performance of the work. The experience and knowledge of this group can easily be tapped to obtain operative input into the development of the task method statement.
- Phase II provides the opportunity for involvement and participation by the operatives assigned to perform the work in which they are given the opportunity to review the task method statement to develop an understanding of what is to be done and how it is to be done and then to examine the work setting to determine if assumptions made during the development of the method statement are still valid. If the assumptions are not valid, the operatives have the opportunity to identify the hazards and risks actually present, conduct a risk assessment, and select risk control methods appropriate for the situation.
- Phase III begins once the physical work is completed. The operatives who performed the work should be given the opportunity to review the actual performance of the work in light of the original task method statement. They should identify what went well and what didn't and to revise the generic task method statement as appropriate.

In the flowchart, the primary symbols used are:

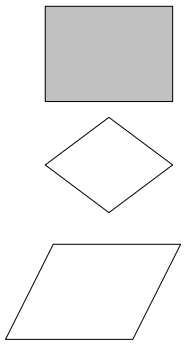

Phase I – Task Method Statement Development

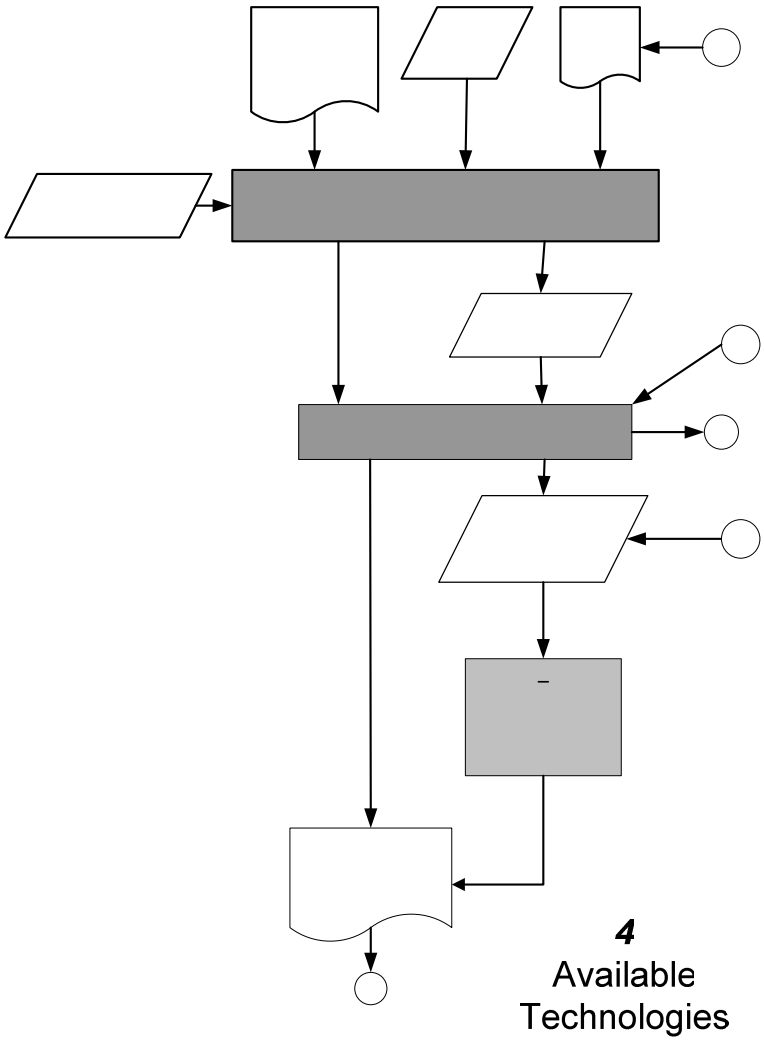

1
Generic Task
Method
Statement

Determine co

Figure 7 - Task Method Statement Development

Devel

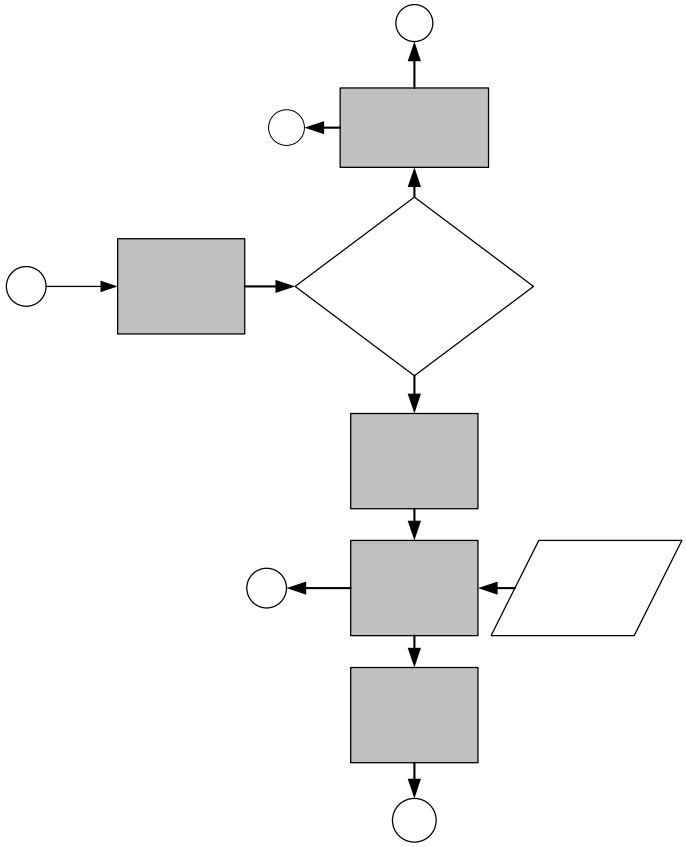

Figure 8 - Hazard and Risk Assessment

7

11

7

Identify
hazards

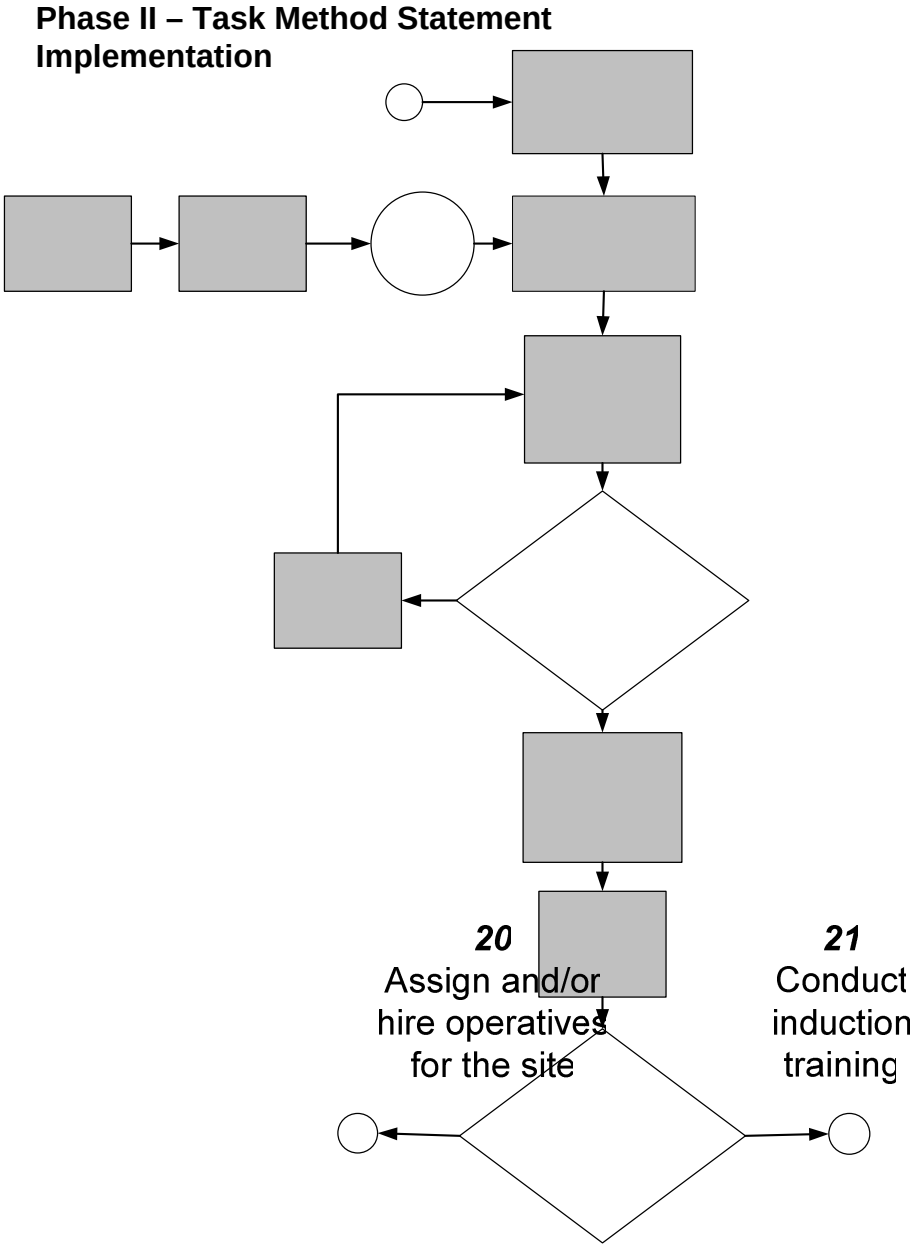

Figure 9 - Task Method Statement Implementation

10

22
Operat
pool

25
Conduct the

NO

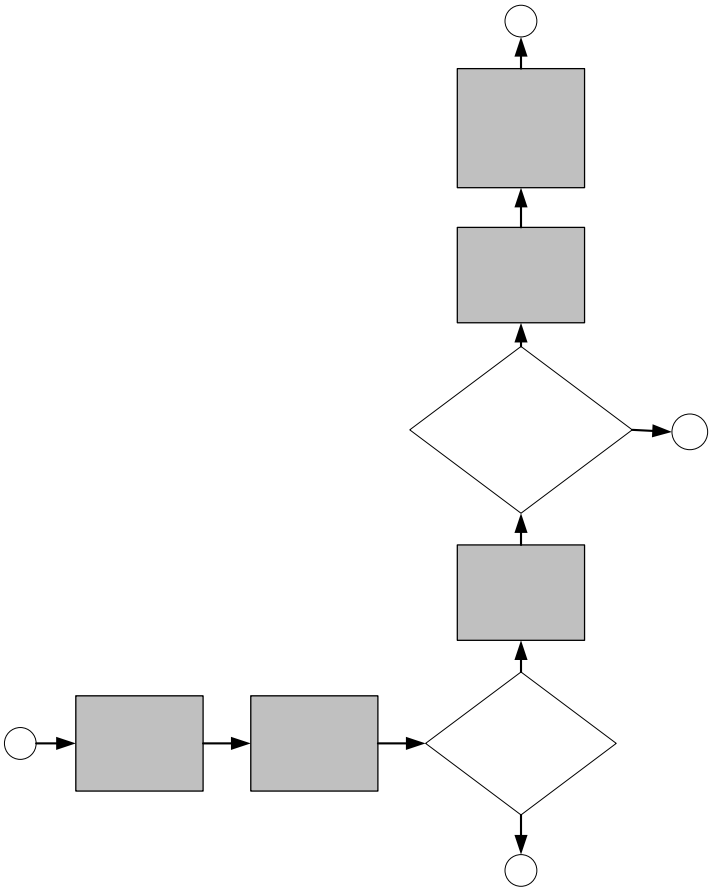

Figure 10 - Evaluate Work Setting Changes

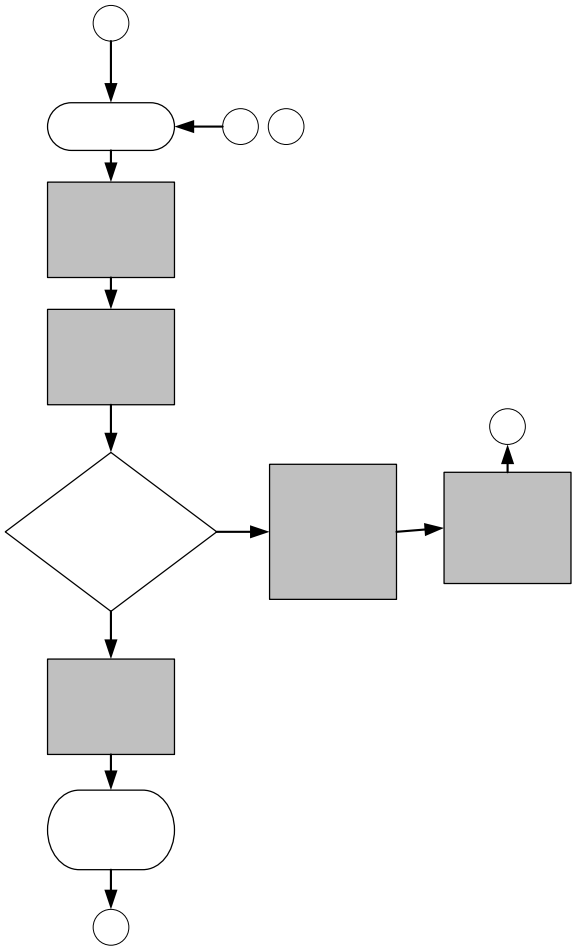

28

36
Begin task

37
Perform Task

38
Evaluate task performance

Figure 11 - Evaluate Task Method Statement Effectiveness

Phase III – Task Method Statement Analysis & Improvement

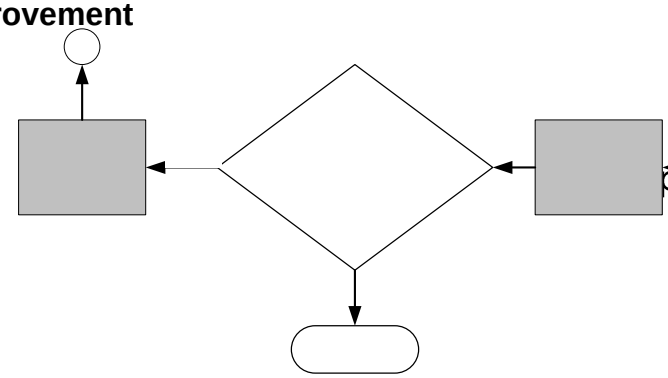

39
Does planned performance = actual performance?

YES

NO

Figure 12 - Continuous Improvement

42
Continue task performance

43
Task completion

Task Method Statement Development, Execution and Improvement Process

Element	Process Element Title and Description
1	Generic Task Method Statement Developed by the contractor using project experience or obtained from a commercial source Evolves based on task performance, identification of best practice, technological change, and changing regulatory requirements Covers the typical performance of the task, not tailored to a specific project or work setting
2	Work Setting The project site and the physical conditions present Location within the site such as ground level or elevated area Inanimate objects within the work area such as power lines, material storage People as objects within the work area such as other trades, supervisors People as actors within the work area such as members of the work crew Weather such as temperature, precipitation Time work is to be performed – day or night
3	Design Prepared by the designer Drawings and specifications detailing what is to be built and, in some instances, how it is to be built Specifies materials
4	Available Technologies Set of potential technologies available to the contractor, either owned by the contractor or available in the market Function of the materials and design
5	Determine construction technology to be employed Influenced by • design • work setting • relative economics • project schedule • workforce skills
6	Contractor knowledge As a result of work on previous projects, the contractor knows how to use the technology, how to organize and sequence work , what trades are required to perform the work, etc.
7	Develop task method statement The task method statement is a work plan. Given what is required by the design, the construction technology selected, and the contractor's knowledge, a plan is developed that identifies • What is to be done • How it is to be done • Where it is to be done • Who is to do it • When it is to be done

8 Required qualifications of operatives
Given the work to be performed, what are the knowledge, skills, and abilities necessary to perform the work in an efficient, safe manner?

9 Identify training necessary to provide required qualifications
Given the knowledge, skills, and abilities required, what training is necessary for operatives to acquire them.

10 Project specific task method statement
This is a detailed work plan for the performance of a specified scope of work within a specific project work setting using a specified technology. It also identifies necessary qualifications.

11 Identify hazards
Given the scope of work, work setting, and technology, what are the hazards present?

12 Can the hazards be eliminated or avoided?
Evaluate the design and work plan to explore alternatives that would eliminate or avoid the identified hazards such as prefabrication to avoid working in the field in the presence of identifiable hazards such as working at heights.

13 Revise design and/or work plan
If the hazards can be eliminated or avoided, the design or work plan must be modified to reflect the necessary changes.

14 Conduct risk assessment
If the hazards cannot be eliminated or avoided, what risks are created by them and what is the likelihood of their occurrence and the severity if they do occur.

15 Identify risk control methods
For each risk, what are the methods to be employed to control it? Wearing a face shield is a method to control the risk of flying particles entering the eye.

16 Regulatory requirements
Given a specific risk, are there regulatory requirements that mandate the use of particular risk control methods?

17 Prepare safety method statement
The safety method statement adds the identified hazards, risks, risk assessment, and risk control methods to the work plan.

18 Identity number of and skills required by operatives to perform the task
Using the project specific task method statement, identify the number of operatives required and the skills they must have to perform the task

19 Assign operatives to perform the task
Individual operatives are selected from the pool and assigned to perform the subject task

20 Assign and/or hire operatives for the site
Contractor assigns operatives to or hires operatives for the project

21 Conduct induction training
Provided by the principal contractor in accordance with paragraph 205 of the Managing Health and Safety in Construction – Construction (Design and Management) Regulations 1994, Approved Code of Practice and Guidance. The induction training provides site personnel with the requirements of the general project safety requirements and how the project is to be conducted to provide a safe and healthy work environment.

Individual trade contractors are responsible for conducting safety training that is specific to the work activities to be undertaken by its personnel.

22 Operative pool

Upon completion of induction training, operatives are placed in a pool from which they are assigned to perform various tasks

23 Review qualifications of operatives assigned to perform the task

The assigned operatives are evaluated to they possess the knowledge and skills necessary for the effective, efficient, and safe performance of the task as identified in the project specific task method statement

24 Do the operatives have the necessary knowledge and skills to perform the task?

The qualifications of the operatives assigned to perform a task are compared to those identified as being necessary for the safe, efficient performance of the task. If the operatives lack the necessary skills, training is required or the operative is reassigned to another task.

25 Conduct requisite training

Assigned operatives are provided the training necessary to provide them with the requisite knowledge and skills.

26 Review project specific task method statement with assigned operatives

Review the method statement with the operatives assigned to perform the task to ensure that they understand

- The work to be performed
- How it is to be performed
- The hazards and associated with the work
- The risk control methods to be used in mitigating or avoiding the risks
- The anticipated work setting upon which the task method statement is based

27 Evaluate planned and actual work settings

Compare the existing work setting with the anticipated work setting to determine if there is a deviation between the two

28 Is the actual work setting different from the planned work setting?

Does the actual work setting differ significantly from the actual work setting?

29 Assess changed conditions

Analyze the work setting deviations to identify changes in the hazards created. The project specific task method statement was prepared sometime before the start of work. It is predicated on a set of assumptions regarding work setting and technology. When it is time to perform the work, it is necessary to evaluate the conditions under which the work is to be performed to ensure that the assumptions are still valid. It is possible that changes in the sequencing of work by other trade contractors, unexpected weather conditions, changing site conditions, etc. have rendered the assumptions invalid.

30 Evaluate hazards

Compare the anticipated hazards with the actual hazards present in the work setting

31 Is there a change in hazards?

Is there a difference in the anticipated hazards and the hazards actually present?

32 Conduct risk assessment

Identify the risks inherent in the hazards and assess them.

33 Do risk control methods have to be modified?
Are the risk control methods identified in the Project Specific Task Method Statement adequate to prevent harm?

34 Revise risk control methods
Revise the planned risk control methods to ensure that the methods to be employed provide adequate protection

35 Revise project specific task method statement
Revise the Project Specific Task method Statement to reflect the changes in risk control methods to be employed

36 Begin task
Once the operatives are familiar with the Project Specific Task Method Statement, work begins

37 Perform task
Work continues

38 Evaluate task performance
Evaluate task performance to determine if planned performance equals actual performance

39 Does planned performance = actual performance?
Decide whether planned or actual. If it does not, there is a deviation.

40 Determine cause(s) of performance deviations
If a deviation does exist, it is necessary to determine its cause or cause(s). For example, planned performance should include no safety incidents. If, however, the performance of the work results in a series of safety incidents, there is a deviation. It is critical that a determination be made as to what is causing the incidents.

41 Revise project specific task method statement
The method statement must be revised to make the changes necessary to eliminate the cause(s) of the incidents.

42 Continue task performance
Performance is as planned and work continues

43 Task completion
The scope work of work for the task has been completed

44 Evaluate process
Upon completion of the work, the work process must be analyzed and evaluated to identify what worked well, what didn't work, and are there any things that should be changed.

45 Should the generic task method statement be revised?
Should the generic task method statement be modified to reflect new approaches or methods?

46 Finish
The work has been completed, performance has been analyzed to identify opportunities for improvement, and proposed new approaches and methods have been incorporated into the generic task method statement.

47 Revise generic task method statement
The generic task method statement is revised to incorporate lessons learned from the performance of the task on the project

Table 2 - Task Method Statement Development, Implementation, and Improvement Process

Interviews

Upon completion of the planning exercise, the participants were interviewed to determine their attitudes and perceptions on operative involvement and consultation in health and safety in terms of the opportunity for operatives to be involved, the capability of operatives to make a serious contribution to improving health and safety, and the motivation or desire of operatives to be involved. The number of participants was small (<20 operatives and the same umber of contractor personnel) so the results of the interviews must be viewed carefully.

Opportunity

Opportunity was discussed in terms of the three phases presented in Figures 7-12 task method statement:

- Development
- Implementation
- Improvement

The consensus of the participants was that only the Implementation Phase was appropriate for operative participation because operatives are typically not employed by the contractor at the time the project specific task method statement is developed. None of the operatives who participated in the exercise had been employed on a project prior to the beginning of work by that trade. The contractor personnel who had previously worked as operatives believed that they bring the operative perspective to this process.

In addition, operatives are typically let go or leave once the physical work had been completed. The participants believed that contractors do not want to incur the costs associated with keeping operatives on the payroll to evaluate the task method statement and the work performed to determine if the statement needs to be improved.

Capability

The consensus was that you cannot generalize. Some workers are very well-qualified and would provide excellent input into the process while others have limited training and experience and would provide little useful input.

Motivation

Motivation was seen as a significant impediment to increased participation and involvement for the following reasons:

- Some of the participants did not believe that it was the operatives' role to be involved in this process
- Some expressed the belief that the methods of employment and compensation limited operatives' motivation to be involved because
    - Operatives employed through agencies perceived their future employment opportunities coming from the agency, not the contractor
    - Operatives employed on a piece-rate or fixed price/defined scope basis saw involvement as costing them money.
- Some of the contractor personnel believed that operatives had little desire to be involved. Lack of desire can result from no or bad experience withinvolvement.

Evaluation of Operative Capability

Three work processes were identified to serve as the basis for assessing operative capability in work process planning. The processes to be selected were to address the priorities of the Health and Safety Executive as shown below:

HSE Priority Issues f0r 2000

- Hand arm vibration syndrome – risk fro scabbling, etc.
- Vehicles and plant – risks from movement, especially reversing
- Welfare – including risk of dermatitis from cement
- Heavy building blocks – risk from manual handling

A summary of the Construction Division priorities for planned interventions 2002/03

Our ***health*** priorities for the year will be to:

reduce the incidence of cement dermatitis by improving the management and control of exposure; insisting on good standards of welfare and health surveillance for those who may be exposed;

reverse the increased incidence of HAVS by eliminating work which leads to high exposure; improving tool selection and increasing health surveillance;

educe exposure to noise by eliminating noisy processes through substitution, selection of noise reduced equipment and encouraging audiometry as a means of monitoring progress;

reducing worker exposure to the risk of musculo-skeletal injury through the promotion of the use of lighter weight construction products, in particular kerbstones, lighter weight blocks and bagged products.

Our priorities for ***safety*** for the year will be:

Transport through promoting effective planning and management of vehicle movements, including risks from slewing machinery and reversing, and focusing on the segregation of vehicles and pedestrians.

Falls by reducing falls from height through promoting the appropriate selection and use of equipment, where possible eliminating the use of ladders, and designing out risks of falls from work at height.

The three work processes identified that incorporate as many of the priority issues as possible were

- Bricklaying for a multiple story building
- Scabbling on a concrete wall
- Groundwork – excavation and installation of a storm water line

The three work processes were evaluated for risks as shown in Table 3.

Project Work Processes

Risk		Work Process		
		Bricklaying for three-story bldg.	**Scabbling**	**Groundwork – excavation & installation of stormwater line**
Health	Cement dermatitis	**X**	**X**	
	HAVS	**X**	**X**	**X**
	Noise exposure	**X**	**X**	**X**
	Musculo-skeletal injury	**X**	**X**	**X**
Safety	Fall from heights	**X**	**X**	
	Struck by moving vehicle	**X**		**X**
	Struck by moving, including flying/falling, object	**X**	**X**	**X**
	Trapped by something collapsing, overturning	**X**	**X**	**X**
	Slips, trips, or falls from same level	**X**	**X**	**X**
	Injured while handling, lifting, or carrying	**X**	**X**	**X**
	Contact with moving machinery	**X**		**X**
	Strike against something fixed or stationary	**X**		**X**

Table 3 - Work Processes and Risks

Assessment

For each of the three work processes, a scenario was developed that required the participants in a planning exercise to perform a series of steps. The three scenarios are presented below.

Exercise Format

The planning exercises were conducted using the following format:

- The principal contractor identified the relevant trade contractor for the specified work process.
- The trade contractor was asked to provide two teams, each consisting of 2-3 personnel. One team was to be comprised of operatives and one of contractor personnel.
- Each team was briefed on the purpose of the exercise and the requirements.
- Each team was given two hours to complete the exercise.
- There were three exercises and two teams per exercise on each project.

For comparison purposes, a best practice document was created by the principal investigator and refined during a series of reviews by contractor health and safety personnel. The best practice method statements are presented in Appendix A.

For each trade contractor, the planning exercise documents completed by its contractor personnel and operatives were compared against each other as well as against the best practice.

For each scenario, the participants were provided the following requirements:

Scope of work: provide a clearly defined description of the work to be undertaken.

- List each activity to be performed in the order in which it is to be performed
- Identify the location at which the activity is to be performed
- Identify the plant and equipment required for each activity
- Identify the tools required for each activity

Hazard Identification: clearly identify the hazards that will result from the performance of the work. For each activity, identify the hazard(s) that arise from the performance of the work.

- Health and Safety Risks and Controls: For each of the hazards identified, clearly identify:
    - The key risks to health and safety associated with each hazard
    - For each risk, the probability of an accident occurring and, if an accident did occur, the severity of the accident. (Use a scale of 1-5 with 1 being the lowest)
    - The key safety control measures and precautions to be implemented to control the health and safety risks

- Access/Egress
    - Clearly identify the safe means of access and egress to the workface. (Show on the drawing)
    - Will general access/egress routes be blocked as a result of the work? If so, what special measures will be taken?

- Hazardous Materials and Substances: clearly identify
    - any materials/substances to be used which are ‘hazardous’ to health

- the key risk(s) to health associated with each material/substance
- the key control measures and precautions to be implemented to control the risks to health

Special Control Measures: identify any work activities that will require special control measures (i.e., permit to work systems, specialist training, specialist equipment, etc.) to be implemented to ensure the adequate protection of employees and/or others against risk of injury

Scenario #1

A building is to be built that is 8m high (2 stories), total perimeter length of 300m. The walls are to be constructed of concrete block with a brick facade. Lintels for the doors and windows are to be stone.

Directions

Limit your consideration to the West wall.

Your team is to analyze this job and to develop a plan as to how to do it, and prepare the basics of a methods statement for it.

On the following pages, you asked to do a series of activities that relate to work plan.

Please feel free to mark on the attached drawing to show locations.

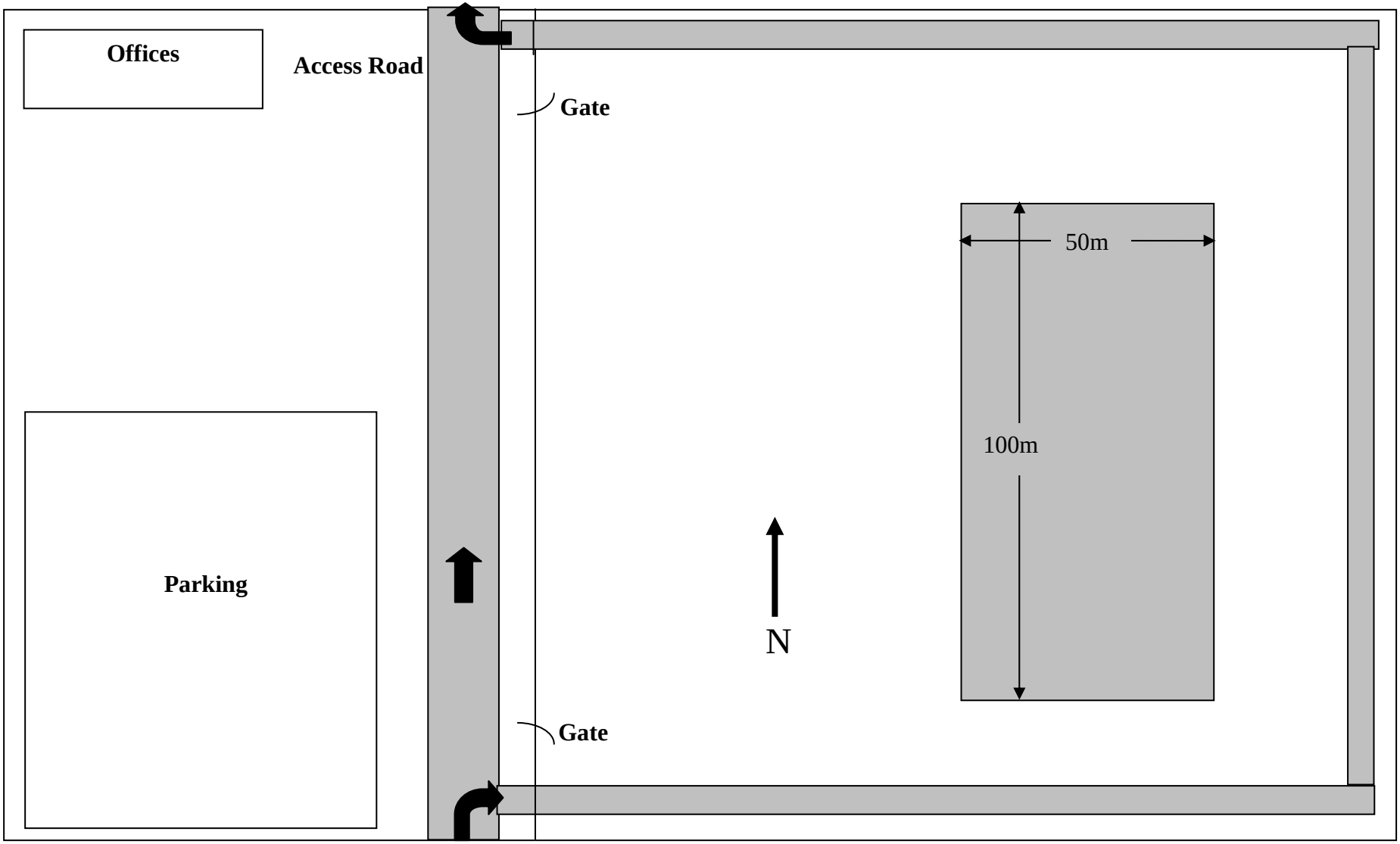
Offices
Access Road
Gate
50m
100m
Parking
N
Gate

Scenario #2

A foundation wall is to be constructed. Each section is to be 10m wide, 5m high, and 350mm thick. The wall section sits on a 150mm high kicker. One section of the wall has been placed. The existing wall section and kicker are to be prepared for the placement of the next wall section by scabbling the exposed concrete surfaces that will be in contact with the next section.

Directions

Your team is to analyze this job and to develop a plan as to how to do it, and prepare the basics of a methods statement for it.

On the following pages, you asked to do a series of activities that relate to work plan.

Please feel free to mark on the attached drawing to show locations.

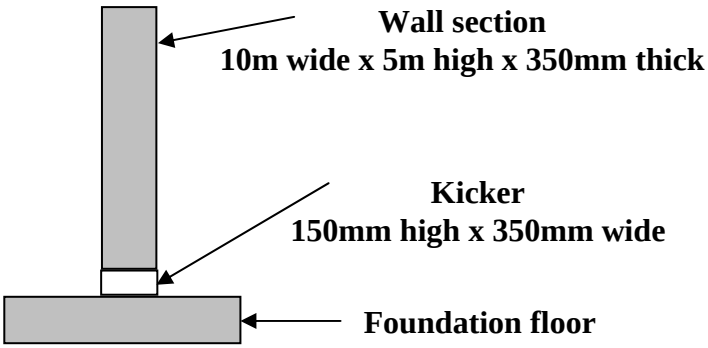

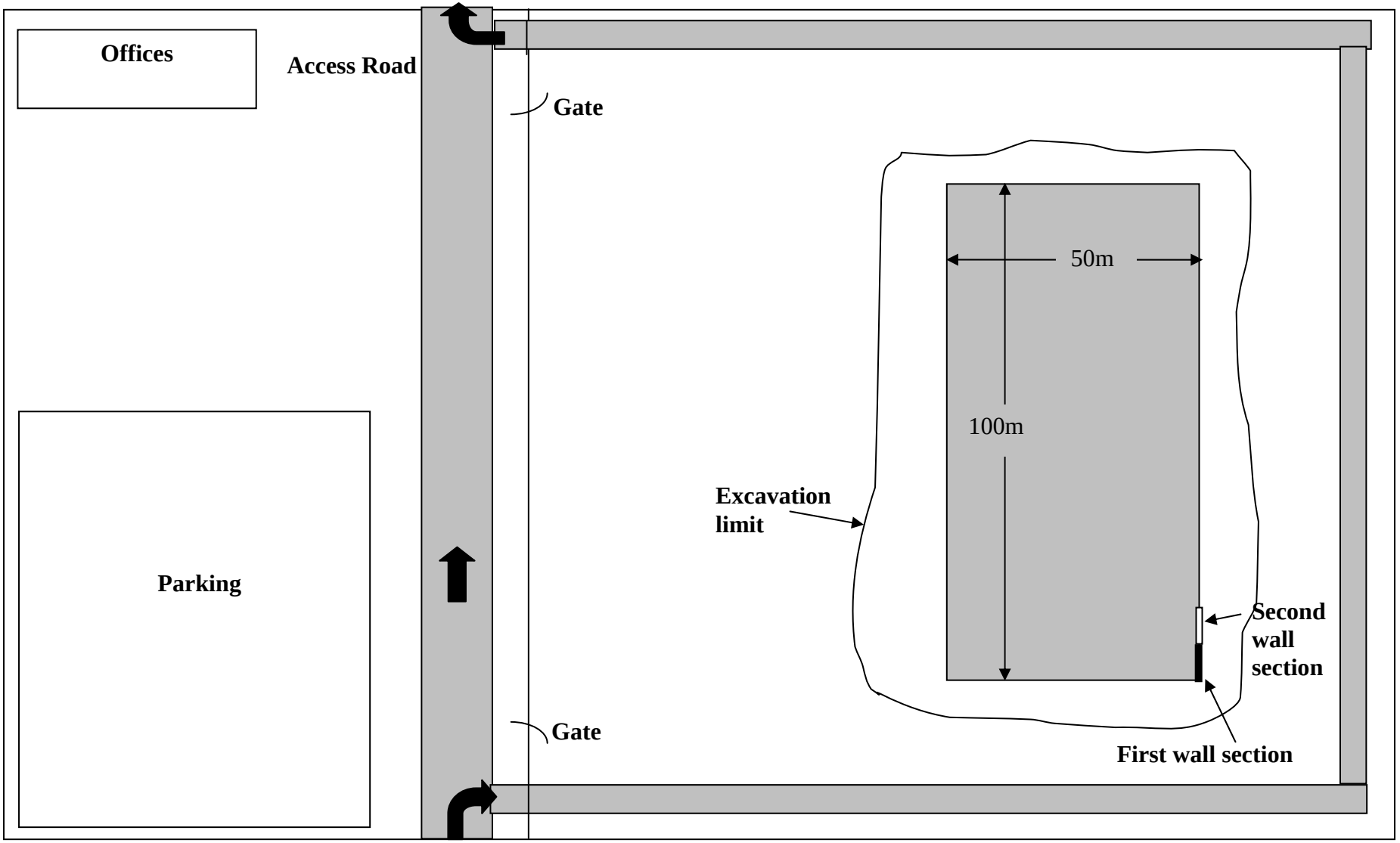
Offices
Access Road
Gate
50m
100m
Excavation limit
Parking
Second wall section
Gate
First wall section

Scenario #3

500m of 600mm concrete pipe are to be installed for storm water drainage in a mild clay soil with running bands of sand. The pipe is to be installed at a depth of 3.5m with allowances for the slope required for drainage. A manhole is to be installed after 300m and a second manhole is to be installed after the next 200m. 150mm of pea gravel is to be placed as bedding in the trench and another 150mm of pea gravel is to be placed on top of the pipe. The soil excavated from the trench is to be used to backfill the trench and should be placed 300mm lifts and compacted with a whacker. Excess soil is to be removed from the site.

Directions

Your team is to analyze this job and to develop a plan as to how to do it, and prepare the basics of a methods statement for it.

On the following pages, you asked to do a series of activities that relate to work plan.

Please feel free to mark on the attached drawing to show locations.

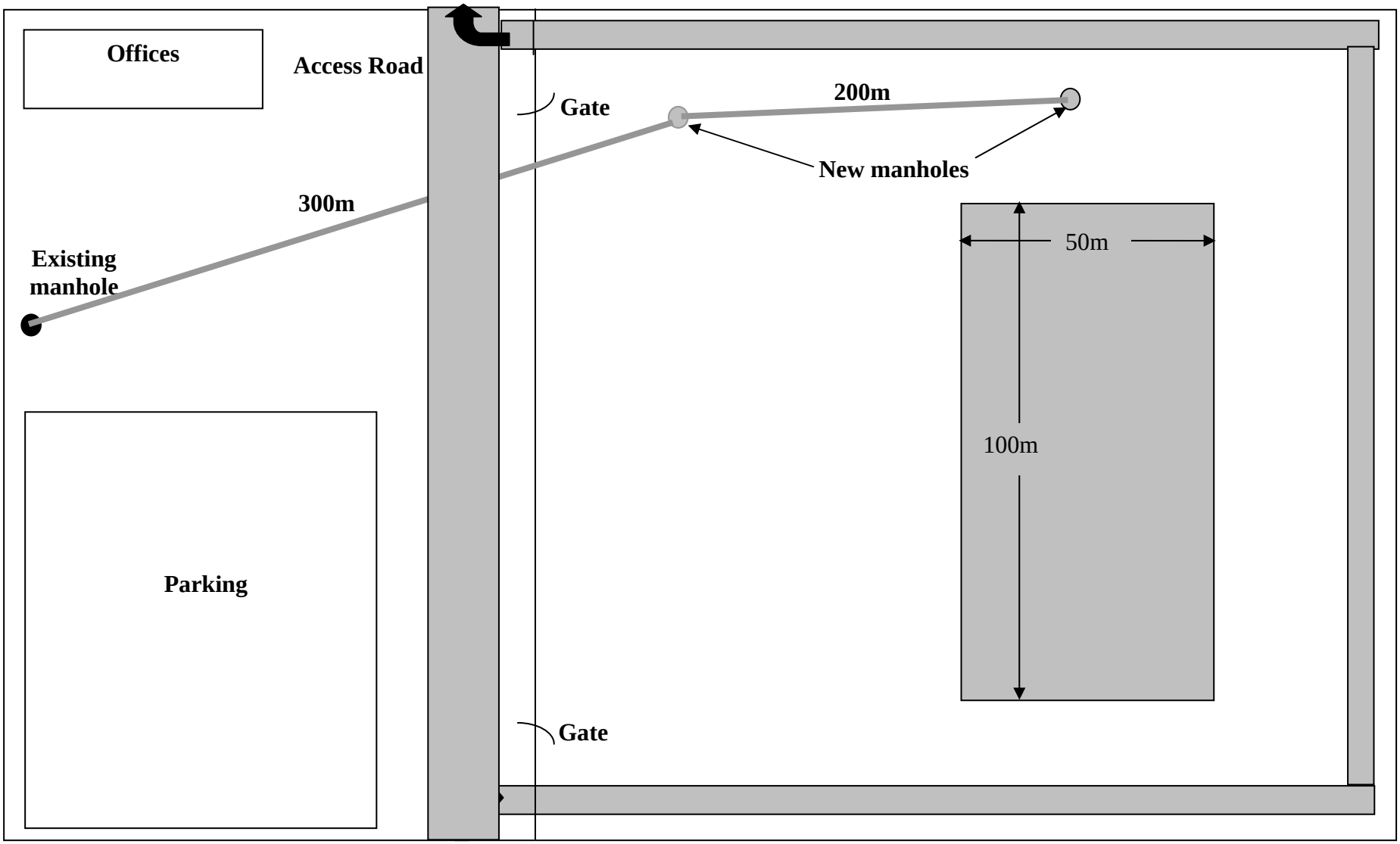
Offices
Access Road
Gate
200m
New manholes
300m
Existing manhole
50m
100m
Parking
Gate

Evaluation of Operative Capability

For each of the three planning exercises, the inputs of the operatives were compared to those of the contractor personnel and both were compared to the best practice task method statement. The bet practice method statements are presented in Appendix A and those prepared by the contractor personnel and operatives are presented in Appendix B. An analysis of the comparisons leads to the following conclusions:

- The nature of the planning exercise may not be the best approach to use in assessing the capability of operatives to participate in health and safety planning. Operatives are not accustomed to thinking in terms of detailed processes and putting their ideas down on paper. A comparison of the operative statements versus those of the contractor personnel or the best practice statement reveals that many of the operative statements are very sketchy potentially indicating a lack of knowledge of the subject. However, questioning of the operatives during and after the exercise found that many of them had the knowledge, but either did not think of it during the exercise or did not know how to include it the written requirements. Use of sequential questioning on the work process revealed that the operatives had the knowledge but were not used to thinking of things in terms of the structure they were asked to use.

- The contractor personnel had more knowledge of the subject matter than did the operatives. Their responses were more comprehensive and more in-depth. They were simply more familiar with the subject matter and thinking in terms of work processes and method statements.

- Operatives are very knowledgeable about how the work is to be done, but need more training in health and safety and method statements. The question becomes how to access the operatives' knowledge without overwhelming them with formalized procedures and paperwork.

Survey on Operative Involvement

An objective of the study was to assess contractor and operative attitudes on operative involvement and consultation in terms of Opportunity, Capability, and Motivation. This was done using a short questionnaire developed for this purpose that was administered to all contractor and operative personnel on the three projects by the principal contractor.

The questionnaire (presented in Appendix C) included the following items:

- Age
- Experience in the construction industry
- Operative or contractor official
- If a contractor official, did the respondent formerly work as an operative
- Type of operative
- If contractor official, did you complete university training?
- If so, what type of training?

The following series of statements were presented to which the respondents were asked the extent of their agreement/disagreement on a 1 to 5 Likert scale:

- Operatives should be involved in planning how work should be done and the development of method statements before the project starts.
- Operatives should be involved in reviewing the method statement prior to the work identified in the method statement begins.
- Operatives should be involved in modifying the method statement, if necessary, before the actual work begins.
- Once the work begins, operatives should be involved in evaluating whether the method statement is producing the desired outcomes.
- If the method statement is not producing the desired outcomes, operatives should be involved in modifying the method statement so that the desired outcomes are obtained.
- After the work is completed, operatives should be involved in evaluating the method statement and its outcomes and determining if modifications should be made in the method statement for future work.
- The average operative is qualified to be inv0olved in work planning and the development of method statements.
- The average operative would like to be involved in work planning and the development of method statements.

Two statements were presented only for operatives -

- I am qualified to be involved in work planning and the development of method statements.
- I would like to be involved in work planning and the development of method statements.

Survey Response

The survey was given to all construction management, trade contractor, and operative personnel on the three sites. The total number of potential respondents was approximately 1100, of which 449 or 40.8% actually responded. The demographics of the respondents were as follows:

Position	
Operative	258
Contractor Official	177
Missing	14

Age years	Mean	Std. Dev.
Operative	35.8	11.1
Contractor Official	38.3	10.4

Experience - years	Mean	St. Dev.
Operative	15.6	11.3
Contractor Official	18.4	11.1

The differences in the mean age and experience are not significant.

Of the 177 contractor officials responding
- 95, or 53.7% reported having worked previously as an operative.
- 67 or 37.9% reported having completed university training
    - 21 studied construction management and 35 studied engineering

Of the 258 operatives responding
- 114 or 44.2% were general operatives
- 16 or 6.2% were apprentice trade operatives
- 106 or 41.1% were trade operatives
- 19 or 7.4% were plant operators

Ten statements relating to the involvement of operatives in the planning and development of method statements were presented and the respondents asked to indicate the extent of their agreement with the statement by circulating the appropriate number from the following choices:.

1 – Strongly disagree
2 – Disagree
3 – Nether agree nor disagree
4 – Agree
5 – Strongly agree

.
The items and the means and standard deviations for the total set of respondents and the sets of operatives and contractor officials are presented in Table 4.

	All Respondents		Operatives		Contractor Officials	
Item	**Mean**	**Std. Dev.**	**Mean**	**Std. Dev.**	**Mean**	**Std. Dev.**
1. Operatives should be involved in planning how work should be done and the development of method statements before the project starts	**3.61**	**1.12**	**3.64**	**1.17**	**3.59**	**1.05**
2. Operatives should be involved in reviewing the method statement prior to the work identified in the method statement beginning.	**3.85**	**1.02**	**3.74**	**1.09**	**3.99***	**0.90**
3. Operatives should be involved in modifying the method statement, if necessary, before the actual work begins.	**3.79**	**1.04**	**3.75**	**1.09**	**3.84**	**0.98**
4. Once the work begins, operatives should be involved in evaluating whether the method statement is producing the desired outcomes.	**3.73**	**1.01**	**3.68**	**1.06**	**3.82**	**0.92**
5. If the method statement is not producing the desired outcomes, operatives should be involved in modifying the method statement so that the desired outcomes are obtained.	**3.78**	**1.01**	**3.77**	**1.02**	**3.82**	**1.03**
6. After the work is completed, operatives should be involved in evaluating the method statement, and its outcomes and determining if modifications should be made in the method statement for future work.	**3.65**	**1.01**	**3.57**	**1.07**	**3.78#**	**0.90**
7. The average operative is qualified to be inv0olved in work planning and the development of method statements	**3.26**	**1.08**	**3.42**	**1.08**	**2.98+**	**1.01**
8. The average operative would like to be involved in work planning and the development of method statements	**3.15**	**1.11**	**3.38**	**1.14**	**2.79+**	**0.95**
For operatives only -						
9. I am qualified to be involved in work planning and the development of method statements			**3.36**	**1.20**		
10. I would like to be involved in work planning and the development of method statements			**3.54**	**1.13**		

#Difference is significant at the 0.05 level

*Difference is significant at the 0.01 level

+Difference is significant at the 0.001 level

Table 4 - Survey Responses

From the mean responses presented in the table, it is evident that both operatives and contractor officials believe operatives should be involved in the planning and development of method statements with the contractor officials having a somewhat stronger belief in that involvement. For four of the eight common items, the

difference between the means of the operatives and that of the contractor officials is statistically significant, although at different levels of significance.

- Item 2: Operatives should be involved in reviewing the method statement prior to the work identified in the method statement beginning

Operative mean:	3.74	the difference is statistically
Contractor official mean	3.99	significant at the 0.05 level

Given that a method statement has been prepared for the work to be performed, contractor officials believe more strongly than the operatives that operative should be involved in reviewing the method statement prior to the start of work. Thus, the contractor officials believe that operatives need to familiarize themselves with the work to be performed, how it is to be performed, the hazards and risks associated with the work, and how those risks are to be controlled. This more proactive role than that perceived by the operatives.

- Item 6: After the work is completed, operatives should be involved in evaluating the method statement and its outcomes and determining if modifications should be made in the method statement for future work.

Operative mean	3.57	the difference is statistically
Contractor official mean	3.78	significant at the 0.01 level

This activity represents the feedback or continuous improvement effort to close the loop. It allows the contractor to address the question of what did we learn in doing this work. The best people to participate in this activity are those who performed the work. The contractor officials believe more strongly than the operatives that this is an appropriate role for operatives.

- Item 7: The average operative is qualified to be involved in work planning and the development of method statements

Operative mean	3.42	the difference is statistically
Contractor official mean	2.99	significant at the 0.001 level

- Item 8: The average operative would like to be involved in work planning and the development of method statements

Operative mean	3.38	the difference is statistically
Contractor official mean	2.79	significant at the 0.001 level

The responses to items 7 & 8 raise a significant concern. In their responses to the first six items, the contractor official respondents indicate a strong belief that operatives should be involved in all aspects of work planning and work statement planning, development, implementation, and revision. However, they don't perceive that the average operative is either qualified to be involved in these activities or motivated to do so. The difference between the mean scores for the operatives and the contractor officials is strongly statistically significant. Operatives have a much more positive perception of the fellow workers than do the contractor officials.

When the responses for the contractor officials are dichotomized into those of contractor officials who were formerly operatives and those who were not, the mean responses for item 7 were 3.09 and 2.88 while those for item 8 were 2.99 and 2.56, respectively. The difference in the mean responses for item 7 was not statistically while that for item 8 was statistically significant at the 0.005 level. Statistically speaking, there is no difference in the perceptions of contractor officials who used to work as operatives and those who did not as to the qualifications of the average operative to be involved in work planning and method statement development. They have reservations about these qualifications.

The difference in the mean responses for the contractor officials who are former operatives and those who were not is significant. The former operatives perceive the average operative as being more motivated to be involved.

In the presentation of the involvement paradigm above, the influence of a manager's perceptions of qualifications and motivation to be involved on the creation of involvement opportunities was discussed. Negative perceptions of these factors will cause a manager to limit involvement opportunities.

The responses to items 7 & 8 were also analyzed by age and experience of the contractor officials. There was no difference in the responses.

The operative respondents perceive themselves the same as the average operative in that the mean scores for the operatives' responses to items 7 and 9 are similar and those of items 8 and 10.

.

Conclusions

The reduction of accidents and fatalities in the construction industry requires a new approach. It is evident that the current approach is not working. Someone once defined insanity as doing something over and over again using the same approach while expecting different results. The construction industry operates with a command and control or top-down philosophy whereby the contractor develops the work plan and operatives implement or execute it. There is little, if any, involvement of operatives in the development of the work plan. There is some point between total control of work process planning and execution by management and total control of that process by operatives at which the benefits of operative involvement are maximized. Thus, operative involvement represents the basis for a new approach to improving health and safety in construction.

The findings of this study provide the foundation for that new approach:

- The process model for the development, implementation, and improvement of a task method statement identifies three opportunities for operatives to become involved.
- Interviews with operatives and contractor personnel reveal that operatives are rarely involved in this process and, that if they are, it is in the implementation phase as the work is about to begin. There is little or no operative involvement in the development or improvement phases of the process.
- Operatives believe that they are more capable of being involved in this process than do contractor personnel.
- The results of the planning exercise reveal that operatives are
    - unfamiliar with and unaccustomed to preparing formal plans
    - able to articulate their knowledge about the work and how it should be done when questioned
    - knowledgeable about best practices for performing construction work
    - less familiar with health issues than they are safety issues
- Operatives see themselves as being more motivated to be involved in the work planning process than do contractor personnel.

Framework

The Task Method Statement provides an excellent framework within which to develop a work plan. The ideal Task Method Statement (TMS) will

- identify the activities to be performed
- identify any hazards that will be encountered in the performance of those activities
- identify the risks associated with each hazard
- present an assessment of each risk
- identify the methods to be used to control for each risk
- identify any hazardous materials and/or substances that will be encountered
- identify any special control measures that will be employed

For these issues to be addressed, a detailed examination of the task to be performed and the environment within which it is to be performed must be conducted. . Operative involvement in this examination can be obtained through increased opportunity for involvement, enhanced capabilities, and improved motivation.

Increased Opportunity

Figures 7-12 present a process model for the development, implementation, and improvement of task method statements. The process consists of the following steps:

- Development of a project specific task method statement in which a generic task method statement is adapted to fit the unique characteristics of an upcoming project. The TMS must be developed within the context of the specific project and work setting within which the work is to be performed. Each construction project has a unique set of hazards that should be identified in the pretender health and safety plan required under the C(DM) Regulations of 1994. For example, installing electrical conduit, pulling in wire, and making connections is a construction task. Performing the task in the construction of a new facility presents one set of hazards while performing the same task in the midst of an operating oil refinery presents a very different set of hazards. The TMS must be tailored to the specific nature of the project

  This is performed prior to the start of work by the trade contractor responsible for the performance of the work. It may require a series of iterations as the trade contractor addresses concerns raised by the principal contractor. Once completed, the project specific task method statement is included in the construction phase health and safety plan as required by the [C(DM) Regulations of 1994].

  At this stage, the opportunity for involvement by the operatives who will perform the task is limited because those operatives will be employed on other projects or will not have been employed yet by the trade contractor.

- Review and modification of the project specific task method statement as work on the task is about to begin.

  Preparation of a project specific task method statement requires the use of a set of assumptions about the work setting within which the task is to be performed. A review of task method statements included in construction phase health and safety plans conducted by the author revealed that they tend to be generic, i.e., applicable to any project and work setting. Thus, the assumptions that were made in the development of the statements were minimal.

  On a project, the work setting (See Element #2, Table 2) within which a task is performed may vary significantly. Factors such as
  - work sequencing, which influences the physical environment in which the task will be performed
  - scheduling, which influences
    - the trade workers and equipment that will be present in the work area
    - when the task is to be performed, which in turn influences
      - the time of day the task is to be performed
      - the weather that will be experienced when the task is to be performed

  Preparation of the project specific task method statement requires that assumptions be made abut these factors. However, it is unlikely that these assumptions will be valid when it is time to perform the task. There may be a very different set of hazards present when the work is actually performed when

compared to the hazards envisioned when the project specific task method statement was developed.

Thus, it is critical that the operatives assigned to perform the task review the project specific task method statement including the assumptions upon which it is predicated prior to beginning the task. This review must include an examination of the expected and actual work settings to identify any differences in the hazards and risks expected top be present and determine if changes need to be made in the risk control methods planned for the task. This review and evaluation must be continuous during the performance of the task.

In addition, once a plan has been developed for the work is performed in a healthy sand safe manner, operatives must be involved in ensuring that the plan is actually followed.

To improve construction health and safety performance, operative involvement is imperative at this stage. Operatives actually performing the work are in the best position to evaluate the work setting and the work to be performed to identify the hazards and risks present. They are also best suited to evaluate the effectiveness of risk control measures planned and/or available for use in the work.

Trade contractors must develop formal schemes to secure operative involvement at this stage of the process. Operatives must take ownership of the work plan and responsibility for its safe execution.

- Review performance of the task in terms of the adequacy and effectiveness of the task method statement and determine whether the generic task method statement should be modified.

  If construction is to become a healthier, safer industry, it is crucial that an attitude of continuous improvement be developed within the industry. There is an old cliché that the job is not done until the paperwork is completed. Continuous improvement requires the belief that the job is not done until performance has been evaluated to determine if there are things that should be done differently in the future to improve performance.

  An evaluation of the work performed by the operatives who performed it is critical to continuous improvement. Trade contractors must develop schemes by which operatives review and evaluate completed work to identify opportunities for improvement, not only in terms of health and safety, but also for productivity and cost.

<u>Enhanced Capability</u>

Construction is an industry whose work force is significantly under trained because of the reluctance of contractors to underwrite the costs of training and/or provide the time for training. More workers must be trained not only in how to perform the work task, but also in how to perform it in a safe and health manner. It is crucial that this training not be perceived as a one-off function. Equipment, materials and tools are constantly changing. Consequently, the knowledge and skills of operatives must be continually upgraded to reflect these changes.

Operatives must have the capability to address effectively each of these issues. This can only come through a combination of education, training, and work experience. It is incumbent upon contractors to provide the education and training.

In addition, operatives must be trained to evaluate work environments and settings to recognize hazards and risks. The planning exercises conducted in this study revealed that operatives are knowledgeable about hazards and risks, but are not experienced in addressing them within a formal framework. Therefore, it is evident that operatives need to be trained in a formalized approach to hazard and risk identification, risk assessment, and the identification of risk control measures.

Improved Motivation

Motivation must be addressed from several perspectives. First, contractors must increase the proportion of their work force that is directly hired. The use of agency or labor only subcontractors as well as self-employed workers reduces the motivation of operatives to be involved because of the contractor's reduced ability to provide rewards associated with that involvement. Second, the use of productivity incentives or lump-sum payment for fixed scope of work packages also reduces the motivation of operatives to be involved. Motivation is a function of the rewards associated with a specific behavior. Rewarding one behavior, e.g., productivity, while hoping that a person engages in another, unrewarded, behavior, e.g., working in a safe manner, makes little sense (Kerr, 1975).

Operatives that are directly hired are typically paid on an hourly basis. Thus, they are paid for the time spent at work. What they do during that time is up to the trade contractor. Thus, it is imperative that contractors establish involvement in health and safety as a behavior that is expected by all operatives it employs. It must become part of the culture of the contractor's organization, i.e., "the way we do things around here."

References

Bryman, A., M. Bresnen, et al. (1987). The Concept of the Temporary System: The Case of the Construction Project. Research in the Sociology of Organizations. New York, JAI Press, Inc. 5: 253-283.

Cherns, A. B. and D. T. Bryant (1984). "Studying the client's role in construction management." Construction Management and Economics 2: 177-184.

Cooper, M. D. (2000). "Toward a model of safety culture." Safety Science 36: 111-136.

Davies V. and Tomasin K. (1990). Construction safety handbook. Thomas Telford: London

Haas, J. (1972). "Binging - Educational Control Among High Steel Workers." American Behavioral Scientist 16(September/October): 27-34.

Haas, j. (1974). "The Stages of the High Steel Ironworker Apprentice Career." The Sociological Quarterly 15(Winter): 93-108.

Haas, J. (1977). "Learning Real Feelings - A Study of High Steel Ironworkers." Sociology of Work and Occupations 4(May): 147-170.

Kerr, Steven. (1975) "On the folly of rewarding A while hoping for B," Academy of Management Journal, 18, pp. 769-783.

Reilly, Paci, and Holl. "Unions, Safety Committees, and Workplace injuries," British Journal of Industrial Relations, June, 1995. pp.

Riemer, J. W. (1975). On Building Buildings: The Social Organization of a Transitional Work Setting. Sociology. Durham, New Hampshire, University of New Hampshire.

Riemer, J. W. (1976). "MistaKes at Work - The Social Organization of Error in Building Construction Work." Social Problems 23(February): 255-267.

Riemer, J. W. (1977). "Becoming a Journeyman Electrician - Some Implicit Indicators in the Apprenticeship Process." Sociology of Work and Occupations 14(February): 87-98.

Riemer, J. W. (1979). Hard Hats - The Work World of Construction Workers. Beverly Hills, CA, Sage Publications.

Schein, E. H. (1996). "Three Cultures of Management: The Key to Organizational Learning." Sloan Management Review(Fall 1996): 9-20.

Stinchcombe, A. (1959). "Bereaucratic and Craft Administration of Production: A Comparative Study." Administrative Science Quarterly 4: 169-197.

Van Maanen, J. and S. R. Barley (1986). Occupational Communities: Culture and Control in Organizations. Research in Organizational Bevhavior, Volume 6. B. M. Staw and L. L. Cummings. Greenwich, CN. JAI Press Inc.: 287-365.

Appendix A

Best Practice Method Statements

56

Scenario #!: Bricklaying at Height – Best Practice Statement

Scope of work: provide a clearly defined description of the work to be undertaken.

- List each activity to be performed in the order in which it is to be performed
- Identify the location at which the activity is to be performed
- Identify the plant and equipment required for each activity
- Identify the tools required for each activity

Act. #	Activity	Location	Plant & Equipment	Tools
1	Layout areas			
2	Stockpile material		Forklift	
3	Provide access for water for mortar (tank or water line connection)			
4	Move in and setup plant and equipment	West wall		
5	Layout/setup brickwork			
6	Mix mortar		Mortar mixer – gas powered	
7	Deliver block/bricks to masons		Material hoist	
8	Deliver mortar to masons		Material hoist	
9	Lay block/brick			
10	Cut block/brick to size		Block cutters and brick cutters	
11	Attach brick ties			

57

12	Erect, adjust, and remove scaffold		Scaffold tower, material hoist, forklift, scissor lift	
13	Daily cleanup of tools, mortar mixer, etc.			
14	Set stone lintels			
15	Deliver block/brick and mortar at height		Material hoist	
16	Dismantle and move out plant and equipment			
17	Cleanup area		Material bags, brushes, skips	

58

Hazard Identification: clearly identify the hazards that will result from the performance of the work. For each activity, identify the hazard(s) that arise from the performance of the work.

Act. #	Hazard(s) occurring because of the activity
1	Contact with other site vehicles
2	Forklift overturning becaue of poorly loaded materials, excessive loading
2	Materials falling because of poor loading or stacking
3	Contact with other buried services while connecting to water line
6	Contact with mortar mixer
6	Mortar dust
7	Manual handling of bricks and blocks
7	Slips, trips, and falls
8	Manual handling of mortar
9	Collapse of unset masonry
9	Falls from small trestles, hop ups, etc.
12	Collapse of scaffold tower if erected incorrectly
13	Slips, trips, and falls
13	Cleaning of cement mixer, contact with mortar
14	Manual handling of lintels
17	Manual handling of material bags

59

Health and Safety Risks and Controls: For each of the hazards identified, clearly identify:

- The key risks to health and safety associated with each hazard
- For each risk, the probability of an accident occurring and, if an accident did occur, the severity of the accident. (Use a scale of 1-5 with 1 being the lowest)
- The key safety control measures and precautions to be implemented to control the health and safety risks

Hazard	Risk	Risk Assessment		Risk control measures and precautions
		Probability	Severity	
Working at heights	Falling	3	5	• Erect suitable scaffold • May require a harness
Falling debris, bricks, etc.	Personal injury or property damage	3	4	• Safety rails
Interaction with forklift/loader and material deliveries in relation to pedestrians	• Personal injury • Materials falling	2	3	• Correct loading of forklift • Ensure loader is suitably trained & competent
Use of brick cutting machine	Personal injury/amputation	2	3	• Training & safe system of work • Goggles, gloves, and dust mask
Exposure to mortar	Cement dermatitis	2	2	• Use barrier cream • Wear gloves • Provide suitable washing facilities
Noise from using brick cutting machine	Hearing loss	2	2	• Wear ear protection • Reduce period of exposure
Collapse of scaffold	Personal injury and/or property damage	1	5	• Scaffold erected and altered by competent scaffolders only • Regular inspection

60

	Materials falling			• Ensure any material stockpiles are equally spaced across the scaffold
Particles of brick dust	Particles in eye	1	3	• Wear safety glasses
Manual handling	Neck, back, & arm injuries	3	4	• Provide clear work area • Reduce size/type of bricks/blocks/lintels • Train and use correct handling techniques • Limit physical handling • Provide well-maintained wheelbarrows • Minimize distance from material storage areas • Toolbox talks
Mortar dust	Dust inhalation	1	3	• Wear dust masks
Dropping bricks, blocks, & lintels	Crushing Personal injury	2	3	• Wear gloves • Toolbox talks • Reduce distance between material stockpile, hoist, & work area
Collapse of unset masonry	Personal injury and/or property damage	2	3	• Monitor height of fresh set walls
Contact with moving machinery or vehicles	Personal injury	1	2	• Train in acting as a banksman for forklift operations • Wear high visibility clothing
Falls from small trestles, hop ups, etc.	Personal injury	2	3	• Arrange for scaffolders to erect trestles and provide level or suitably stepped area to erect trestles
Slips, trips, falls	Personal injury	2	2	• Provide clear access to work areas • Regularly remove sacks of debris
Windy conditions	Materials blown off the tower	1	5	• Monit0r weather conditions, work should not be carried out in windy conditions

61

Access/egress:

Clearly identify the safe means of access and egress to the workface. (Show on the drawing)

Will general access/egress routes be blocked as a result of the work? If so, what special measures will be taken?

NO, but ensure the operatives are aware of traffic movements around the site. Generally, access/egress to the west façade would be lijtied or blocked. Movement of delivery vehicles (forklift) from the perimeter across the road must be clearly identified.

62

Hazardous Materials and Substances: clearly identify

- any materials/substances to be used which are 'hazardous' to health
- the key risk(s) to health associated with each material/substance
- the key control measures and precautions to be implemented to control the risks to health

Hazard materials/substances	Risks associated with each material/substance	Control measures and precautions
• Mortar dust	• Contact dermatitis	• Use barrier cream • Wear gloves
• Brick dust	• Contact dermatitis	• Use barrier cream • Wear gloves
• Silica	• Silicosis	• Wera gloves

63

Special Control Measures: identify any work activities that will require special control measures (i.e., permit to work systems, specialist training, specialist equipment, etc.) to be implemented to ensure the adequate protection of employees and/or others against risk of injury.

Activities requiring special control measures	Special control measures
Access to work area – crossing access road, avoiding delivery vehicle routes	Permit to work system
Working at height	Permit to work system Specialist training May require harness

64

Scenario #2: Scabbling – Best Practice Statement

Scope of work: provide a clearly defined description of the work to be undertaken.

- List each activity to be performed in the order in which it is to be performed
- Identify the location at which the activity is to be performed
- Identify the plant and equipment required for each activity
- Identify the tools required for each activity

Act #	Activity	Location	Plant & Equipment	Tools
1	Mark-off area	5m zone around work area	Signage	
2	Setup barriers to keep out unauthorized personnel	5m zone around work area	Plastic tape and stanchions	knife
3	Set up compressor, hoses, and scabblers	Work area	Compressor, hoses, and scabbler	
4	Scabble kicker – horizontal joint surface	Horizontal kicker	Pneumatic scabbler	
5	Scabble vertical joint surface	Vertical joint surface	Scaffold, vertical debris barriers	
6	Cleanup scabbled material	5m zone around work area	Material bags, brushes, mobile skips	
7	Wrap-up hoses and stow scabblers, hoses, and compressor	From work area	Compressor, hoses, and scabbler	
8	Remove vertical debris barriers and barriers surrounding work zone	From 5m zone around work area	Barriers	

65

Hazard Identification: clearly identify the hazards that will result from the performance of the work. For each activity, identify the hazard(s) that arise from the performance of the work.

Act #	Hazard(s) occurring because of the activity
2	• Using knife
3	• Manual handling
4	• Flying particles or debris • Handling concrete material • Hand arm vibration • Failure of tools • Hydraulic fluid leaks • Failure of couplings and hoses • Manual handling • Exhaust fumes • Noise • Fire
5	• All the hazards identified for Activity #4 • Working at height
6	• Handling concrete material • Flying particles or debris
7	• Manual handling
8	• Manual handling

66

Health and Safety Risks and Controls: For each of the hazards identified, clearly identify:

- The key risks to health and safety associated with each hazard
- For each risk, the probability of an accident occurring and, if an accident did occur, the severity of the accident. (Use a scale of 1-5 with 1 being the lowest)
- The key safety control measures and precautions to be implemented to control the health and safety risks

Hazard	Risk	Risk Assessment		Risk control measures and precautions
		Probability	Severity	
Knife usage	Cutting finger	4	2	• Wear gloves • Toolbox talk
Manual handling	Straining hand, arm or back	4	4	• Toolbox talk on kinetic lifting
Flying particles or debris	Particles in eye Cuts	4	3	• Proper task instruction • Wear safety glasses and goggles; long sleeves; and gloves • Provide eye wash stations • Provide suitable washing facility with warm water
Handling concrete material	Cement dermatitis Dust inhalation	3	3	• Wear long sleeves and gloves; provide facilities for washing • Wear dust masks
Use of pneumatic tools	Hand arm vibration	4	3	• 1 hour on the tools, 1 hour sweeping or shoveling
Failure of tools	Personal injury and/or property damage	2	3	• Regular inspections and maintenance required. Record all full inspections
Hydraulic fluid leaks	Personal injury and/or property damage resulting from slip or	2	3	• Regular inspections and maintenance required.

67

	fall			
Failure of couplings and hoses	Personal injury and/or property damage	3	3	• Use only coupling that grip settings. (Crows foot fittings are banned) Check hoses frequently during use
Exhaust fumes	Inhalation of exhaust fumes	3	4	• Locate compressor downwind
Noise	Reduced hearing	4	3	• Ear protection must be worn
Fire	Personnel injury and/or property damage	3	5	• No clothing to be stored/kept in body of compressor
Working at height	Personnel injury and/or property damage	4	4	•
Slips, trips, and falls on scabbled material	Personal injury	4	3	• Keep debris swept up • Fence off area to keep people out

68

Access/egress:

Clearly identify the safe means of access and egress to the workface. (Show on the drawing)

Access to the foundation area is readily available and there are no problems or any risk from movement of site vehicles across the whole site from other activities. If vehicles move across the site, a site traffic managementplan should be prepared and conveyed to the workforce during Induction training and Toolbox talks (site wide issues).

Will general access/egress routes be blocked as a result of the work? If so, what special measures will be taken?

NO, but regarding other activities on the site if they interfere with the access route, e.g., excavations

69

Hazardous Materials and Substances: clearly identify

- any materials/substances to be used which are 'hazardous' to health
- the key risk(s) to health associated with each material/substance
- the key control measures and precautions to be implemented to control the risks to health

Hazard materials/substances	Risks associated with each material/substance	Control measures and precautions
Concrete material	Cement dermatitis	• Use barrier cream • Wear gloves and long sleeves • Provide wash-up facilities
Concrete dust inhalation	Breathing problems Dust inhalation	• Wear dust mask • Wet area to reduce amount of dust • Keep area clean
Hydraulic fluid	Burns Slips, trips, or falls	• Require monitoring of hoses and plant • Wear gloves

70

Special Control Measures: identify any work activities that will require special control measures (i.e., permit to work systems, specialist training, specialist equipment, etc.) to be implemented to ensure the adequate protection of employees and/or others against risk of injury.

Activities requiring special control measures	Special control measures
None	

71

Scenario #3: Excavation/Pipe Installation - Best Practice Statement

Scope of work: provide a clearly defined description of the work to be undertaken.

- List each activity to be performed in the order in which it is to be performed
- Identify the location at which the activity is to be performed
- Identify the plant and equipment required for each activity
- Identify the tools required for each activity

Act. #	Activity	Location	Plant & Equipment	Tools
1	Obtain permit to dig			
2	Engineer to layout manhole locations and pipe run			
3	Ensure all necessary support and safety equipment is available			
4	Assessment should be conducted to determine whether excavation should be classed as a confined space. If so, a confined space entry permit must be obtained.			
	Erect edge protection / barriers around the proposed area for excavation for the manhole	Around the proposed excavation	Temporary fencing / barriers	
5	Excavate for manhole – openings at each end of the manhole box are to be sheeted		Excavator Manhole box Lifting chains Sheeting	
6	Install access ladder			
7	Blind bottom of excavation with concrete		Dumpers	

72

8	Set up rocker pipes and butts in concrete, set 1st manhole ring		Excavator Lifting slings	
9	Engineer check elevations for pipe run			
10	Construct manhole		Excavator Lifting slings	
11	Excavate trench		Trench box	
12	Erect fending around excavation area to prevent third party access			
13	Install access ladder in trench			
14	Place bedding in trench with machine bucket only; level with shovel		Excavator Dump trucks Dumpers	Shovel
15	Place and install pipe in trench		Excavator Lifting slings Laser	
16	Place bedding around pipe			shovel
17	Place 1st layer of backfill in trench			shovel
18	Compact backfill material		Compactor	
19	Place remaining backfill, pull up trench box and manhole box, and compact until completed			
20	Remove edge protection / barriers	Manhole and excavation		

73

Hazard Identification: clearly identify the hazards that will result from the performance of the work. For each activity, identify the hazard(s) that arise from the performance of the work.

Activity Number	Hazard(s) occurring because of the activity
5, 11	Machine overturning
5, 11	Trench collapse
Numerous	Men trapped
15	Trapped fingers
Numerous	Material falling into trench
Numerous	Falls into trench
10	Concrete burns
Numerous	Trenches flooding
Numerous	Manual handling
Numerous	Dust
Numerous	Unauthorized access
Numerous	Contact with moving machinery or pedestrians
numerous	Asphyxiation if ground gases are present and or ground is contaminated

74

Health and Safety Risks and Controls: For each of the hazards identified, clearly identify:

- The key risks to health and safety associated with each hazard
- For each risk, the probability of an accident occurring and, if an accident did occur, the severity of the accident. (Use a scale of 1-5 with 1 being the lowest)
- The key safety control measures and precautions to be implemented to control the health and safety risks

Hazard	Risk	Risk Assessment		Risk control measures and precautions
		Probability	Severity	
Machine overturning	Personal injury/property damage	3	5	• Ensure ground is firma and level
Trench collapse	Personal injury/property damage	2	5	• Ensure trench/manhole boxes are installed correctly
Men trapped	Personal injury	2	5	• No work or access allowed outside of the trench/manhole boxes
Trapped fingers	Personal injury	3	2	• Wear gloves
Material falling into trench	Personal injury/property damage	3	3	• Keep materials stacked well away from trench • Use wheel stops if dumpers are tipping directly into trenches
Falls into trench	Personal injury	2	4	• Fence off with solid barriers
Concrete burns	Cement dermatitis	2	3	• Use barrier cream • Wear rubber gloves and boots • Provide suitable washing facilities
Trenches flooding	Personal injury/property damage	2	3	• Bedding materials should be delivered to an area of the site with a drainage area, collected by a dumper, and delivered to within machine reach as required

75

				• Trenches to be pumped out with submersible pump as required
Manual handling	Personal injury	3	3	• Training in appropriate techniques • Provide clear access routes
Unauthorized access	Personal injury	2	5	• Fence off with solid barriers
Dust	Inhalation	2	3	•
Contact with moving machinery or pedestrians	Personal injury/property damage	3	5	• Exclude all people and machines not directly involved in the work
Asphyxiation	Personal injury / explosion	2	5	• Monitor gas levels, • Ensure suitably trained and competent staff carry out the work

76

Access/egress:

Clearly identify the safe means of access and egress to the workface. (Show on the drawing)

Material deliveries will be made along designated haul routes that will determined as work progresses and identified at toolbox talks

Access to and egress from trench and manhole boxes must be by securely tied ladders

Will general access/egress routes be blocked as a result of the work? If so, what special measures will be taken?

The main site access road will be blocked. Traffic will be routed to the perimeter access road.

77

Hazardous Materials and Substances: clearly identify

- any materials/substances to be used which are 'hazardous' to health
- the key risk(s) to health associated with each material/substance
- the key control measures and precautions to be implemented to control the risks to health

Hazard materials/substances	Risks associated with each material/substance	Control measures and precautions
Concrete	Cement dermatitis	Use barrier cream Wear rubber boots and gloves Provide appropriate washing facilities
Joint gasket lubricant	Skin irritation	Wear gloves

78

Special Control Measures: identify any work activities that will require special control measures (i.e., permit to work systems, specialist training, specialist equipment, etc.) to be implemented to ensure the adequate protection of employees and/or others against risk of injury.

Activities requiring special control measures	Special control measures

79

Scope of work: provide a clearly defined description of the work to be undertaken.

- List each activity to be performed in the order in which it is to be performed
- Identify the location at which the activity is to be performed
- Identify the plant and equipment required for each activity
- Identify the tools required for each activity

Act #	Activity	Location	Plant & Equipment	Tools
1	Mark-off area	5m zone around work area	Signage	
2	Setup barriers to keep out unauthorized personnel	5m zone around work area	Plastic tape and stanchions	knife
3	Set up compressor, hoses, and scabblers	Work area	Compressor, hoses, and scabbler	
4	Scabble kicker – horizontal joint surface	Horizontal kicker	Pneumatic scabbler	
5	Scabble vertical joint surface	Vertical joint surface	Scaffold, vertical debris barriers	
6	Cleanup scabbled material	5m zone around work area	Material bags, brushes, mobile skips	
7	Wrap-up hoses and stow scabblers, hoses, and compressor	From work area	Compressor, hoses, and scabbler	
8	Remove vertical debris barriers and barriers surrounding work zone	From 5m zone around work area	Barriers	

80

Hazard Identification: clearly identify the hazards that will result from the performance of the work. For each activity, identify the hazard(s) that arise from the performance of the work.

Act #	Hazard(s) occurring because of the activity
2	• Using knife
3	• Manual handling
4	• Flying particles or debris • Handling concrete material • Hand arm vibration • Failure of tools • Hydraulic fluid leaks • Failure of couplings and hoses • Manual handling • Exhaust fumes • Noise • Fire
5	• All the hazards identified for Activity #4 • Working at height
6	• Handling concrete material • Flying particles or debris
7	• Manual handling
8	• Manual handling

81

Health and Safety Risks and Controls: For each of the hazards identified, clearly identify:

- The key risks to health and safety associated with each hazard
- For each risk, the probability of an accident occurring and, if an accident did occur, the severity of the accident. (Use a scale of 1-5 with 1 being the lowest)
- The key safety control measures and precautions to be implemented to control the health and safety risks

Hazard	Risk	Risk Assessment		Risk control measures and precautions
		Probability	Severity	
• Knife usage	• Cutting finger	4	2	• Wear gloves • Toolbox talk
• Manual handling	• Straining hand, arm or back	4	4	• Toolbox talk on kinetic lifting
• Flying particles or debris	• Particles in eye • Cuts	4	3	• Proper task instruction • Wear safety glasses and goggles; long sleeves; and gloves • Provide eye wash stations • Provide suitable washing facility with warm water
• Handling concrete material	• Cement dermatitis • Dust inhalation	3	3	• Wear long sleeves and gloves; provide facilities for washing • Wear dust masks
• Use of pneumatic tools	• Hand arm vibration	4	3	• 1 hour on the tools, 1 hour sweeping or shoveling
• Failure of tools	• Personal injury and/or property damage	2	3	• Regular inspections and maintenance required. Record all full inspections
• Hydraulic fluid	• Personal injury and/or	2	3	• Regular inspections and maintenance required.

82

leaks	property damage resulting from slip or fall			
• Failure of couplings and hoses	• Personal injury and/or property damage	3	3	• Use only coupling that grip settings. (Crows foot fittings are banned) Check hoses frequently during use
• Exhaust fumes	• Inhalation of exhaust fumes	3	4	• Locate compressor downwind
• noise	• Reduced hearing	4	3	• Ear protection must be worn
• Fire	• Personnel injury and/or property damage	3	5	• No clothing to be stored/kept in body of compressor
• Working at height	• Personnel injury and/or property damage	4	4	•
• Slips, tris, and falls on scabbled material	• Personal injury	4	3	• Keep debris swept up • Fence off area to keep people out

83

Access/egress:

Clearly identify the safe means of access and egress to the workface. (Show on the drawing)

Access to the foundation area is readily available and there are no problems or any risk from movement of site vehicles across the whole site from other activities. If vehicles move across the site, a site traffic managementplan should be prepared and conveyed to the workforce during Induction training and Toolbox talks (site wide issues).

Will general access/egress routes be blocked as a result of the work? If so, what special measures will be taken?

NO, but regarding other activities on the site if they interfere with the access route, e.g., excavations

84

Hazardous Materials and Substances: clearly identify

- any materials/substances to be used which are 'hazardous' to health
- the key risk(s) to health associated with each material/substance
- the key control measures and precautions to be implemented to control the risks to health

Hazard materials/substances	Risks associated with each material/substance	Control measures and precautions
• Concrete material	• Cement dermatitis	• Use barrier cream • Wear gloves and long sleeves • Provide wash-up facilities
• Concrete dust inhalation	• Breathing problems • Dust inhalation	• Wear dust mask • Wet area to reduce amount of dust • Keep area clean
• Hydraulic fluid	• Burns • Slips, trips, or falls	• Require monitoring of hoses and plant • Wear gloves

85

Special Control Measures: identify any work activities that will require special control measures (i.e., permit to work systems, specialist training, specialist equipment, etc.) to be implemented to ensure the adequate protection of employees and/or others against risk of injury.

Activities requiring special control measures	Special control measures
• None	

86

Scenario: Excavation/Pipe Installation Best Practice

Scope of work: provide a clearly defined description of the work to be undertaken.

- List each activity to be performed in the order in which it is to be performed
- Identify the location at which the activity is to be performed
- Identify the plant and equipment required for each activity
- Identify the tools required for each activity

Act. #	Activity	Location	Plant & Equipment	Tools
1	Obtain permit to dig			
2	Engineer to layout manhole locations and pipe run			
3	Ensure all necessary support and safety equipment is available			
4	Assessment should be conducted to determine whether excavation should be classed as a confined space. If so, a confined space entry permit must be obtained.			
	Erect edge protection / barriers around the proposed area for excavation for the manhole	Around the proposed excavation	Temporary fencing / barriers	
5	Excavate for manhole – openings at each end of the manhole box are to be sheeted		Excavator Manhole box Lifting chains Sheeting	
6	Install access ladder			
7	Blind bottom of excavation with concrete		Dumpers	

87

8	Set up rocker pipes and butts in concrete, set 1st manhole ring		Excavator Lifting slings	
9	Engineer check elevations for pipe run			
10	Construct manhole		Excavator Lifting slings	
11	Excavate trench		Trench box	
12	Erect fending around excavation area to prevent third party access			
13	Install access ladder in trench			
14	Place bedding in trench with machine bucket only; level with shovel		Excavator Dump trucks Dumpers	Shovel
15	Place and install pipe in trench		Excavator Lifting slings Laser	
16	Place bedding around pipe			shovel
17	Place 1st layer of backfill in trench			shovel
18	Compact backfill material		Compactor	
19	Place remaining backfill, pull up trench box and manhole box, and compact until completed			
20	Remove edge protection / barriers	Manhole and excavation		

88

Hazard Identification: clearly identify the hazards that will result from the performance of the work. For each activity, identify the hazard(s) that arise from the performance of the work.

Activity Number	Hazard(s) occurring because of the activity
5, 11	Machine overturning
5, 11	Trench collapse
Numerous	Men trapped
15	Trapped fingers
Numerous	Material falling into trench
Numerous	Falls into trench
10	Concrete burns
Numerous	Trenches flooding
Numerous	Manual handling
Numerous	Dust
Numerous	Unauthorized access
Numerous	Contact with moving machinery or pedestrians
numerous	Asphyxiation if ground gases are present and or ground is contaminated

89

Health and Safety Risks and Controls: For each of the hazards identified, clearly identify:

- The key risks to health and safety associated with each hazard
- For each risk, the probability of an accident occurring and, if an accident did occur, the severity of the accident. (Use a scale of 1-5 with 1 being the lowest)
- The key safety control measures and precautions to be implemented to control the health and safety risks

Hazard	Risk	Risk Assessment		Risk control measures and precautions
		Probability	Severity	
Machine overturning	Personal injury/property damage	3	5	• Ensure ground is firma and level
Trench collapse	Personal injury/property damage	2	5	• Ensure trench/manhole boxes are installed correctly
Men trapped	Personal injury	2	5	• No work or access allowed outside of the trench/manhole boxes
Trapped fingers	Personal injury	3	2	• Wear gloves
Material falling into trench	Personal injury/property damage	3	3	• Keep materials stacked well away from trench • Use wheel stops if dumpers are tipping directly into trenches
Falls into trench	Personal injury	2	4	• Fence off with solid barriers
Concrete burns	Cement dermatitis	2	3	• Use barrier cream • Wear rubber gloves and boots • Provide suitable washing facilities
Trenches flooding	Personal injury/property damage	2	3	• Bedding materials should be delivered to an area of the site with a drainage area, collected by a dumper, and delivered to within machine reach as required

90

				• Trenches to be pumped out with submersible pump as required
Manual handling	Personal injury	3	3	• Training in appropriate techniques • Provide clear access routes
Unauthorized access	Personal injury	2	5	• Fence off with solid barriers
Dust	Inhalation	2	3	•
Contact with moving machinery or pedestrians	Personal injury/property damage	3	5	• Exclude all people and machines not directly involved in the work
Asphyxiation	Personal injury / explosion	2	5	• Monitor gas levels, • Ensure suitably trained and competent staff carry out the work

91

Access/egress:

Clearly identify the safe means of access and egress to the workface. (Show on the drawing)

Material deliveries will be made along designated haul routes that will determined as work progresses and identified at toolbox talks

Access to and egress from trench and manhole boxes must be by securely tied ladders

Will general access/egress routes be blocked as a result of the work? If so, what special measures will be taken?

The main site access road will be blocked. Traffic will be routed to the perimeter access road.

92

Hazardous Materials and Substances: clearly identify

- any materials/substances to be used which are 'hazardous' to health
- the key risk(s) to health associated with each material/substance
- the key control measures and precautions to be implemented to control the risks to health

Hazard materials/substances	Risks associated with each material/substance	Control measures and precautions
Concrete	Cement dermatitis	Use barrier cream Wear rubber boots and gloves Provide appropriate washing facilities
Joint gasket lubricant	Skin irritation	Wear gloves

93

Special Control Measures: identify any work activities that will require special control measures (i.e., permit to work systems, specialist training, specialist equipment, etc.) to be implemented to ensure the adequate protection of employees and/or others against risk of injury.

Activities requiring special control measures	Special control measures

Appendix B

Planning Exercise Results

Scenario #1 – Brickwork at heights

Scenario: Brick Project: #1 Team: Contractor

Scope of work: provide a clearly defined description of the work to be undertaken.

- List each activity to be performed in the order in which it is to be performed
- Identify the location at which the activity is to be performed
- Identify the plant and equipment required for each activity
- Identify the tools required for each activity

Act. #	Activity	Location	Plant & Equipment	Tools
1	Uploading wagons, blocks & bricks	Access Road and storage area	HI-AB & manitoll	
2	Loading work area (1st Lift) Internal block Leaf first, brick 2nd	West wall of building	Manitoll & fork lift truck	
3	Construct first lift scaffold including loading gantry's	West wall of building	Scaffold tubes & fitting etc	Scaffolder Spanner level etc
4	Load up 1st lift Scaffold internal blocks & lintels. 1st lift bricks & lintels. Mortar lifted in tubs.	West wall of building	Blocks, lintels & bricks & mortar block & tackle for stone lintels	
5	Load up rest of lifts as previous & build	West wall of building	Blocks, lintels & bricks & mortar block & tackle for stone lintels	
6	Dismantle scaffold	West wall	Wagon to remove tube & fitting off site	
7	Clean site	West wall	Skip for brick Brick & block debris	

Hazard Identification: clearly identify the hazards that will result from the performance of the work. For each activity, identify the hazard(s) that arise from the performance of the work.

Activity Number	Hazard(s) occurring because of the activity
1	Unloading & loading:- Danger that a load may drop or swing into a person whilst being lifted via crane, manatoll & hi-ab. Or that lifting device is over-loaded hence may topple crane etc
2	Manhandling blocks or other heavy weights. Danger of back injury or gash to hands. Crushed finger, crushed feet.
3	Scaffold erection:- Fall from height. 3rd party in danger of falling material. Under tightened scaffold clips.
4	Block work: - Construction dangers include = mortar splash to eyes & skin causing burn. Chips of block in eye, when breaking or cutting block.
5	Timer work:- Splinters & nail sticking out Windows – Glass – Falling & breaking
6	Lintel. Same lift hazard. Falling – crushing, overloading etc
7	Roofing components. Falling – crushing, overloading etc
8	Removing & dismantle scaffold. Dangers – same falling of operatives & danger of dropping & crushing of 3rd parties
9	
10	
11	Overall danger to site Fire – portion/entire building/burns to operatives (plumbing, welding, grinding etc)/3rd Party, Arc Eye

Health and Safety Risks and Controls: For each of the hazards identified, clearly identify:

- The key risks to health and safety associated with each hazard
- For each risk, the probability of an accident occurring and, if an accident did occur, the severity of the accident. (Use a scale of 1-5 with 1 being the lowest)
- The key safety control measures and precautions to be implemented to control the health and safety risks

Hazard	Risk	Risk Assessment		Risk control measures and precautions
		Probability	Severity	
1	Overall – fire Safety	1	5	Proper fire extinguishers – coded & tested to be at all fire exits. Fire exits marked & with gather point.
2	Working with lead generating tools etc			Regular Fire Drill. Fire Marshals designated & all operative to be inducted on fire drill plan. Designated
3				Smoking area on site & hot work permits for any burning, grinding or naked flame on site.
4	Falling from Heights & dropping material	1	4	Handrails at regulation heights. All harness to be worn & harness to be checked regular. Training provided where necessary.
5	Falling & materials dropping	1	4	Kicker boards to be in place. Hard hats to be worn at all times.

Access/egress:

Clearly identify the safe means of access and egress to the workface. (Show on the drawing)

Access to work face from welfare facilities via north gate entrance, also egress or via designated fire escape routes.

Will general access/egress routes be blocked as a result of the work? If so, what special measures will be taken?

Site plans shows there should no blocked routes if plan is adhered to. If any route is blocked then use any permitted route off site available.

Hazardous Materials and Substances: clearly identify

- any materials/substances to be used which are 'hazardous' to health
- the key risk(s) to health associated with each material/substance
- the key control measures and precautions to be implemented to control the risks to health

Hazard materials/substances	Risks associated with each material/substance	Control measures and precautions
Diesel - Petrol	Fire – skin contact	Fire extinguishers, gloves, barrier cream, swarfega washing
Brick Acid	1 splashes to eyes, skin contact	Eye shower, gloves, barrier cream, swarfega washing
Gas & Welders, Oxyacetylene	Fire, explosion	Separate cage for bottles of gas, specialised fire extinguishers
Mortar	Splashes to eyes, skin contact	Safety glasses, gloves, washing.

Special Control Measures: identify any work activities that will require special control measures (i.e., permit to work systems, specialist training, specialist equipment, etc.) to be implemented to ensure the adequate protection of employees and/or others against risk of injury.

Activities requiring special control measures	Special control measures
Unloading & Loading. Basic lifting – via crane manatou, hi-ab	Up to 3 bankman – (CITB). Proper lifting gear – tested & certified. Defined working area & loading bays. Follow method statements & lifting plans.
Unloading & loading. Basic lifting – manual labour	Do not lift more than 25kg, & keep manual lifting to a minimum. Lift using legs & straight back. Follow method statement & lifting plans.
Scaffold erection & dismantle	To be carried out by qualified scaffolders. Recognised certificate. Weekly tested after initial inspection for use. All kick boards, handrails & gantry gates to be secured. Ladders tied.
Training for changing abrasive wheels Training for changing Hilt guns Regular toolbox tables on safety issues and correct use of tools	Netting where necessary. Alarmed & secured each night
Harness Training	All electrical tools be checked daily and PAT tested. Harness to be checked.

Scenario: Brick Project: #2 Team: Contractor

Scope of work: provide a clearly defined description of the work to be undertaken.

- List each activity to be performed in the order in which it is to be performed
- Identify the location at which the activity is to be performed
- Identify the plant and equipment required for each activity
- Identify the tools required for each activity

Act. #	Activity	Location	Plant & Equipment	Tools
1	Permits – access to the working area. Ensure first aid & welfare facilities in place. Emergency fire point, exit gate 1 &2	Offices		
2	Allocate storage area, plant & equipment 30m x 30m	By access road, adjacent to west elevation	Barriers storage area	
3	Allocate fuel point Bonded stank	Inside storage area		
4	Off loading bay Secure container for tools Access : In gate 1 Out gate 2	Front of storage area	Storage container	
5	Allocate mortar misc. area Distribution of mortar & blocks etc to be done using a forklift	In storage area	Forklift	

6	Access into work area 8m wide for internal distribution	West elevation		
7	Transport block work/brick by forklift to internal leaf	Adjacent to work space (west wall)	Forklift	
8	Build up the first lift at brickwork and block work			
9	Construct a loading bay with scaffold. Repeat procedure as per lift	Adjacent to west wall		
10	As doors & windows formed. Transport lintels by forklift to strengthen scaffold use lifting beam & block & tackle to place stones	West elevation		

Hazard Identification: clearly identify the hazards that will result from the performance of the work. For each activity, identify the hazard(s) that arise from the performance of the work.

Activity Number	Hazard(s) occurring because of the activity
1	Non
2	Lifting, falling objects
3	Fire, spillage, toxic fumes. Dangerous to the environment
4	Lifting, falling objects, accident with vehicles (delivery)
5	Dangerous off loading, worker struck by forklift
6	Falling debris from scaffold
7	Same as number 5
8	Block lifting, mortar splash, ships of block & brick. Slips & strips
9	Same as 8 and falls from height, falling debris, falling tools
10	Trapped fingers & same as number 5

Health and Safety Risks and Controls: For each of the hazards identified, clearly identify:

- The key risks to health and safety associated with each hazard
- For each risk, the probability of an accident occurring and, if an accident did occur, the severity of the accident. (Use a scale of 1-5 with 1 being the lowest)
- The key safety control measures and precautions to be implemented to control the health and safety risks

Hazard	Risk	Risk Assessment		Risk control measures and precautions
		Probability	Severity	
Manual Lifting	Back injury	3	2	Tool box talks, blocks to be under 20kg. Competent supervision to assess each talk
Dangerous chemicals	Fire, spillage, inhalation	1	3	Double bonded rank, fire exit. Drip trays. Warning signs to avoid inhalation
Moving vehicles on site	Workers struck by vehicle	1	5	Allocated roads with speed limit light beacons & sound beacons for reversing. Pedestrian access
Movement of materials on site	Being struck by a vehicle & falling objects	1	4	Site speed limit. Fenced off areas around loading bays. Qualified forklift driver
Falling debris	Injuries	3	4	Competent operatives to erect scaffold, scaffold tag system in use. Have toe board, hand rail & brick guard & opening gates to loading bays
Debris, mortar, splash, block chips	Injuries, cement burns	2	2	Appropriate PPE & gloves, steel toe boots, hi-vis, no shorts, eye protection, hard hat
Trapped fingers	Injuries	1	1	Mechanical lifting, close supervision & regular tool box

				talks
Use of abrasive wheels	Personal injuries	1	2	Specialist training for operatives

Access/egress:

Clearly identify the safe means of access and egress to the workface. (Show on the drawing)

As shown on diagram 1

Will general access/egress routes be blocked as a result of the work? If so, what special measures will be taken?

Not blocked as effective logistical measures in place

Hazardous Materials and Substances: clearly identify

- any materials/substances to be used which are 'hazardous' to health
- the key risk(s) to health associated with each material/substance
- the key control measures and precautions to be implemented to control the risks to health

Hazard materials/substances	Risks associated with each material/substance	Control measures and precautions
Mortar	Cement burns	PPE (gloves, eye protection etc)
Fuel	Fire, spillage, fumes	Separate storage, signage, drip trays

Special Control Measures: identify any work activities that will require special control measures (i.e., permit to work systems, specialist training, specialist equipment, etc.) to be implemented to ensure the adequate protection of employees and/or others against risk of injury.

Activities requiring special control measures	Special control measures
Forklift driver, scaffolders. Appropriately trained personnel	Check qualifications, keep records

Scenario: Brick Project: #3 Team: Contractor

Scope of work: provide a clearly defined description of the work to be undertaken.

- List each activity to be performed in the order in which it is to be performed
- Identify the location at which the activity is to be performed
- Identify the plant and equipment required for each activity
- Identify the tools required for each activity

Act. #	Activity	Location	Plant & Equipment	Tools
1	Order materials, plan deliveries, agree storage space, fence around storage area, prep works for silo position (i.e. hard standing) including need for water & power	As marked on sketch	Heras fencing, metal storage container, “concrete slab for silo’s”	Hammers, saws, levels for conc slab
2	Organise plant for loading/offloading materials & access requirements	N/A	Telescopic f/lift, kwikstage scaffold, genie lift, pole scaffold (by others), pallet truck	Wheelbarrows, shovels
3	Check work area, ready & safe, ground suitable to work on, other preceding trades complete far enough in advance, others working overhead?	West elevation	N/A	N/A
4	Loading out materials from storage compound work face	Storage area/silo area to west elevation	Forklift, pallet truck	Wheel barrows
5a	Carry out prep works at ground level, internal block work to sill level, block work to ground, concrete cavity fill, bituthene to	West elevation	Mixer, pallet truck, auto level	Wheelbarrow, levels, trowel & all bricklaying tools

	cavity fill, block work to 150 above ground Install DPC at 150 above ground level			
5b	Inspection by building inspector	West elevation	N/A	N/A
6	Build internal block work 1st lift	W. Elevation inside	Forklift, silo, SDS hammer drill	Wheelbarrows, bricklaying tools
7	Build brickwork externally 1st lift, including insulation, tiles etc	W. Elevation outside	Forklift, silo, SDS hammer drill	Wheel barrows, bricklaying tools
8	Build internal block work 2nd lift to u/s 1st floor. Including installation of lintels to inside (&DPC tray from outside to inside)	W Elevation inside	Forklift, kwickstage scaffold, silo, SDS hammer rill, genie lift	Wheelbarrows, bricklaying tools
9	Erect external pole scaffold, for 2nd lift brickwork, supervisor to check ok before allowing workforce on it (each day)	W. Elevation outside	Pole scaffold	N/A
10	Build 2nd lift brickwork up to u/s lintels. Lintels loaded on to loading bay by forklift, lintels transferred to opening by 2 operatives as less than 50kg install lintels on mortar bed/dpc	W Elevation outside	Pole scaffold, forklift, silo, SDS hammer drill	Wheelbarrows, bricklaying tools
11	Raise external pole scaffold to 1st floor level to eliminate fall hazard. Load out blocks for inside from scaffold	W Elevation outside	Pole scaffold, forklift, pallet truck	N/A
12	Build blwk & bwk in stages from 1st floor as per 6-10. Leave access panel (i.e. window opening) for access loading out materials	W Elevation inside & outside	Pole scaffold, kwickstage scaffold, forklift, pallet truck, silo, SDS hammer drill, genie lift	Wheelbarrow, bricklaying tools

13	Build up access panel	W. Elevation inside & outside	Silo, SDS hammer drill, pole scaffold	Wheelbarrow, bricklaying tools
14	Strip external scaffold & clean brickwork as each lift stripped	W Elevation outside	Pole scaffold	Hose, deck scrubbers

Hazard Identification: clearly identify the hazards that will result from the performance of the work. For each activity, identify the hazard(s) that arise from the performance of the work.

Activity Number	Hazard(s) occurring because of the activity
(1) #1	Plant movements delivery materials, movement over underground services, overhead services when offloading with hi-ab/forklift
(2) #3	Trenches from groundworks – danger of falls, solid ground conditions – to support scaffolding
(3) #4	Plant movements as (1) above
(4) #5a	Possibility trades working overhead, falling objects?
(5) #7	----------
#8	Kwickstage erected incorrectly, tampered with. Working at heights – falls, materials or operatives, installing lintels
#9	Scaffold erected incorrectly, tampered with, working at heights – falls, materials or operatives installing lintels, other trades above
#8 #9 #10 #12	Manual handling issues for lintel installations

Health and Safety Risks and Controls: For each of the hazards identified, clearly identify:

- The key risks to health and safety associated with each hazard
- For each risk, the probability of an accident occurring and, if an accident did occur, the severity of the accident. (Use a scale of 1-5 with 1 being the lowest)
- The key safety control measures and precautions to be implemented to control the health and safety risks

Hazard	Risk	Risk Assessment		Risk control measures and precautions
		Probability	Severity	
Plant movements	Crush by plant Crush by material	1	4/5	One way road layout Offloading areas defined Signage & segregation
Services above & below ground	Electrocution Instability of load	1	5	Signage & segregation, induction, toolbox talk Operator training
Trades working overhead	Materials fall on operatives below	2	3	Signage, protection (toe boards/scaffold fans), PPE, Removal of operatives below
Working at heights	Fall of operatives Fall of material	2	4	Handrails/toe boards, harness (if necessary), F91 inspections weekly, visual inspections scaffold daily, scaffold tags, removal of operatives below, management of materials stacking
Lintel installation	Crush fingers Dropping on feet	1	1	Barrier off work area Use of plant where possible Design of material

				PPE Securing of lintel to plant
Manual handling	Muscle strain	1	1	Training/toolbox talks Material design – can it weigh less Use of plant (mechanical means)

Access/egress:

Clearly identify the safe means of access and egress to the workface. (Show on the drawing)

- Pedestrian crossing from office area
- Pedestrian gate separate from vehicular access
- Designated pedestrian walkway

All marked on drawing

Will general access/egress routes be blocked as a result of the work? If so, what special measures will be taken?

There shouldn't be any need to block the walkways, they can be crossed at designated points

Hazardous Materials and Substances: clearly identify

- any materials/substances to be used which are 'hazardous' to health
- the key risk(s) to health associated with each material/substance
- the key control measures and precautions to be implemented to control the risks to health

Hazard materials/substances	Risks associated with each material/substance	Control measures and precautions
Concrete	Burns, dermatitis	Gloves, PPE
Bituthene/DPC (glue/primers)	Toxic, fumes from glues & primers	Open areas well ventilated, gloves, correct mask, PPE
Mortar	Dermatitis , burns	Gloves, PPE
Silica	Inhalation of dust	Masks, well ventilated when cutting clocks/bricks, working with cement

Special Control Measures: identify any work activities that will require special control measures (i.e., permit to work systems, specialist training, specialist equipment, etc.) to be implemented to ensure the adequate protection of employees and/or others against risk of injury.

Activities requiring special control measures	Special control measures
Plant operations	Operator training
Scaffold inspections/erections	CITB training, supervisory training
Working at heights	Scaffold handrails, toe boards etc, safety harness

Scenario: Brick Project: #1 Team: Operative

Scope of work: provide a clearly defined description of the work to be undertaken.

- List each activity to be performed in the order in which it is to be performed
- Identify the location at which the activity is to be performed
- Identify the plant and equipment required for each activity
- Identify the tools required for each activity

Act. #	Activity	Location	Plant & Equipment	Tools
1	Create a compound. Making an orderly stack of the materials. Also the tools required need to be stored/placed.	As shown on drawing	Fork lift/skips/tubs/brushes. Silo, mortar board, harnesses, wheel barrow, harness & safety for ppe at all times.	General brickky tools, shovel
2	Loading out. Distribute pallets at blocks internally and brick externally.	As shown in drawing	Fork lift/crane. Pallets for block/brick, radios	
3	Use Silo and load mortar into tubs for transportation to where needed.	Silo within the compound	Silo, Fork lift, tubs	
4	Set profiles and build first lift int/ext in that order	Along West wall		Brickky tools
5	After scaffold is now erected to requires/height, int/ext. Reload with block/brick to the loading bay. The mortar		Crane, Forklift, Wheel barrow, tubs, harness, mortar boards, radio	shovels

6	Build second lift and include lintels when needed		Forklift Wheel Barrow	Bricky tools

Hazard Identification: clearly identify the hazards that will result from the performance of the work. For each activity, identify the hazard(s) that arise from the performance of the work.

Activity Number	Hazard(s) occurring because of the activity
1	Not stack materials properly and that they are secure. With accessibility only to authorise personnel. Compound is clean, clear of obstructions
2	Competent/trained operatives to work forklift. Also, safety for all personnel when moving materials.
3	Careful of spillage of mortar, uneven surfaces, movement of forklift
4	Incorrect building techniques that can cause injury. Tripping
5	Safety working at heights, falling, tripping, material falling
6	Working at heights, operating forklift, material dropping, scaffold not clear

Health and Safety Risks and Controls: For each of the hazards identified, clearly identify:

- The key risks to health and safety associated with each hazard
- For each risk, the probability of an accident occurring and, if an accident did occur, the severity of the accident. (Use a scale of 1-5 with 1 being the lowest)
- The key safety control measures and precautions to be implemented to control the health and safety risks

Hazard	Risk	Risk Assessment		Risk control measures and precautions
		Probability	Severity	
1	Access e.g. children. Theft	3 medium	5 Fatal	Lock fast secure perimeter and gate. Security man on site overnight.
2	Spillage/Materials falling	1	4	Trained operative where required. Also banksmen, good communication
3	Spillage/splashes	1	4	Care when working, avoid contact in eyes, wear goggles if needed
4	Incorrect building/lifting techniques	2	3	Trained workers, also safety advise on lifting given on regular basis
5	Falling (people/materials) Movement of plant	2	4	Wearing safety harness. Banksmen to guide crane

Access/egress:

Clearly identify the safe means of access and egress to the workface. (Show on the drawing)

Will general access/egress routes be blocked as a result of the work? If so, what special measures will be taken?

NO

Hazardous Materials and Substances: clearly identify

- any materials/substances to be used which are 'hazardous' to health
- the key risk(s) to health associated with each material/substance
- the key control measures and precautions to be implemented to control the risks to health

Hazard materials/substances	Risks associated with each material/substance	Control measures and precautions
Cement	Burns to skin/eyes	Protective clothing, glasses. Cleaning hands carefully after

Special Control Measures: identify any work activities that will require special control measures (i.e., permit to work systems, specialist training, specialist equipment, etc.) to be implemented to ensure the adequate protection of employees and/or others against risk of injury.

Activities requiring special control measures	Special control measures

Scenario: Brick Project: #2 Team: Operative

Scope of work: provide a clearly defined description of the work to be undertaken.

- List each activity to be performed in the order in which it is to be performed
- Identify the location at which the activity is to be performed
- Identify the plant and equipment required for each activity
- Identify the tools required for each activity

Act. #	Activity	Location	Plant & Equipment	Tools
1	Setting out position of walls	Gridline A		Site level, chalk lines, spirit level, pencil
2	Loading out walls	From storage area to floor slab adjacent to Gridline A	Forklift, pallet truck, wheel barrow	
3	Build up block work to DPC height	Grid A	Forklift for mortar, wheel barrow	Shovel, bricklayers tools
4	Build in DPC tray and build up block work to height ready for scaffold	Grid A	Fork lift for mortar, wheel barrow	Shovel, bricklayers tools
5	Build up brickwork to DPC level. Build in DPC. Continue brickwork building. Insert cavity insulation and drill –fix cavity ties. Ready for scaffold	Grid A Storage area to Grid A	Fork lift, wheel barrow, drill	Shovel, bricklayers tools
6	Scaffold internal block work. Build up block work to lintel height	A	Forklift	Scaffolding mallet, bricklayers tools
7	Scaffold external walls, tube and fitting Build up brickwork to lintel height	A A	Forklift Drill	Scaffolder, bricklayers tools

8	Lift lintels onto bearings and bed in place. Build up block work to underside of slab, building in head restraints. Build up brickwork to scaffold height	A From storage area to A	Forklift	
9	Set out and build up first floor block work to lintel height	Grid A	Fork lift, quick-stage scaffold, wheel barrow, drill	Site level, bricklayers tools
10	Build up face work to lintel height. Lift lintels onto bearings	A	Fork lift	
11	Build block work to finish height Build brickwork to finish and XXXX	2	Fork lift	

Hazard Identification: clearly identify the hazards that will result from the performance of the work. For each activity, identify the hazard(s) that arise from the performance of the work.

Activity Number	Hazard(s) occurring because of the activity
1	Possible holes in slab, lift pit, etc
2	Site traffic, i.e. other fork trucks, dumpers. Overhead cables etc. Trapped fingers, abrasion
3	As 1 & 2
4	As 3
5	Other trades working above, dust from drilling ties
6	Trapped fingers loading and abrasion
7	As above
8	Trapped fingers positioning lintel, dust from drilling head and stairs
9	Holes in slab, fall from height

Health and Safety Risks and Controls: For each of the hazards identified, clearly identify:

- The key risks to health and safety associated with each hazard
- For each risk, the probability of an accident occurring and, if an accident did occur, the severity of the accident. (Use a scale of 1-5 with 1 being the lowest)
- The key safety control measures and precautions to be implemented to control the health and safety risks

Hazard	Risk	Risk Assessment		Risk control measures and precautions
		Probability	Severity	
Unprotected holes in slab	Fall	3	5	Inspection of work area including access route. All hazards to be barriered or covered for load bearing
Collision with other plant and machinery, overhead hazard	Collision Overturned vehicle Electrocution	1	5	Site traffic control, i.e. one-way system, banks men, warning signs
Trapped fingers, abrasion	Cuts	3	1	Use of gloves when handling materials
Other trades working above	Fall of tools or materials	3	5	Liaison with other trades to eliminate work above each other. Provide canopy protection
Dust from drilling	Inhalation of dust. Impact on eye injury	2	3	Wearing of eye protection; goggles, glasses Wearing of dust masks
Fall from height, first floor slab	An operative or materials falling from slab	3	5	Provide a crash deck Provide harness points
Drilling using 110 drill	Electrocution	1	3	All power tools to be tested by a qualified person

Access/egress:

Clearly identify the safe means of access and egress to the workface. (Show on the drawing)

Access to work face from welfare facilities via north gate entrance, also egress or via designated fire escape routes.

Will general access/egress routes be blocked as a result of the work? If so, what special measures will be taken?

Site plans shows there should no blocked routes if plan is adhered to. If any route is blocked then use any permitted route off site available.

Hazardous Materials and Substances: clearly identify

- any materials/substances to be used which are 'hazardous' to health
- the key risk(s) to health associated with each material/substance
- the key control measures and precautions to be implemented to control the risks to health

Hazard materials/substances	Risks associated with each material/substance	Control measures and precautions
Mortar	Cement burns (skin irritant) Lime burns (skin irritant)	Gloves
DPC adhesive	Fumes inhalation Skin irritation	Use in ventilated location Wear gloves

Special Control Measures: identify any work activities that will require special control measures (i.e., permit to work systems, specialist training, specialist equipment, etc.) to be implemented to ensure the adequate protection of employees and/or others against risk of injury.

Activities requiring special control measures	Special control measures
Fork lift driver	Trained personnel
Scaffolding	Trained personnel, scaffold register, scaffold tags, inspection

Scenario: Brick Project: #3 Team: Operative

Scope of work: provide a clearly defined description of the work to be undertaken.

- List each activity to be performed in the order in which it is to be performed
- Identify the location at which the activity is to be performed
- Identify the plant and equipment required for each activity
- Identify the tools required for each activity

Act. #	Activity	Location	Plant & Equipment	Tools
1	Foundations	Ground	Concrete, Concrete lorry	Float, Vibrator, straight edge, sand floor once dried
2	Foundations to be surveyed			
3	Order blocks			
4	Unload blocks, sand, cement, lentils		Fork truck	Mixer
5	Blocks to the job		Fork truck	
6	Brick-layers start wall			Hammer, bolster, trowel
7	Once brick work is 4-5 feet, erect scaffold			
8	Keep erected scaffold to required height for wall to be completed			

Hazard Identification: clearly identify the hazards that will result from the performance of the work. For each activity, identify the hazard(s) that arise from the performance of the work.

Activity Number	Hazard(s) occurring because of the activity
1	Foundations could crack or sink
2	Surveyors could condemn job if foundations incorrectly done
3	-
4	Bags could split. Blocks could be damaged
5	Blocks could restrict viewing if too high on forklift
6	Brick must be laid correctly
7	Scaffold must be erected accordingly and ticketed
8	Ensure scaffold is still safe to work

Health and Safety Risks and Controls: For each of the hazards identified, clearly identify:

- The key risks to health and safety associated with each hazard
- For each risk, the probability of an accident occurring and, if an accident did occur, the severity of the accident. (Use a scale of 1-5 with 1 being the lowest)
- The key safety control measures and precautions to be implemented to control the health and safety risks

Hazard	Risk	Risk Assessment		Risk control measures and precautions
		Probability	Severity	
Concrete	Personal injury	4	4	Be careful around concrete and PPE
Blocks being moved	Falling off forks	3	5	Ensure blocks are level and secure
	Any trips or falls about the job	4	4	Be cautious

Access/egress:

Clearly identify the safe means of access and egress to the workface. (Show on the drawing)

Will general access/egress routes be blocked as a result of the work? If so, what special measures will be taken?

NO

Hazardous Materials and Substances: clearly identify

- any materials/substances to be used which are 'hazardous' to health
- the key risk(s) to health associated with each material/substance
- the key control measures and precautions to be implemented to control the risks to health

Hazard materials/substances	Risks associated with each material/substance	Control measures and precautions
Concrete dust	Inhaling	Dust masks
Blocks	Back damage	Correct lifting method

Special Control Measures: identify any work activities that will require special control measures (i.e., permit to work systems, specialist training, specialist equipment, etc.) to be implemented to ensure the adequate protection of employees and/or others against risk of injury.

Activities requiring special control measures	Special control measures
Brickwork	Time-served brick-layers
Machine operative	Must have appropriate tickets
Scaffold	Must have appropriate tickets

Scenario #2 – Scabbling

Scenario: Scabbling Project: #1 Team: Contractor

Scope of work: provide a clearly defined description of the work to be undertaken.

- List each activity to be performed in the order in which it is to be performed
- Identify the location at which the activity is to be performed
- Identify the plant and equipment required for each activity
- Identify the tools required for each activity

Act. #	Activity	Location	Plant & Equipment	Tools
1	Take a good look at the job			
2	Make sure plant and equipment are in good working order			
3	Make sure tools are in god working order			
4	Scabble wall face and kicker on site		Compressor and air hose Single head scabbler	

Hazard Identification: clearly identify the hazards that will result from the performance of the work. For each activity, identify the hazard(s) that arise from the performance of the work.

Activity Number	Hazard(s) occurring because of the activity
1	Fall – not properly fitted tower
2	White finger – not using proper tool
3	Dust – from the scabbler
4	Chip in eye – no goggles
5	Trip – no clear access

Health and Safety Risks and Controls: For each of the hazards identified, clearly identify:

- The key risks to health and safety associated with each hazard
- For each risk, the probability of an accident occurring and, if an accident did occur, the severity of the accident. (Use a scale of 1-5 with 1 being the lowest)
- The key safety control measures and precautions to be implemented to control the health and safety risks

Hazard	Risk	Risk Assessment		Risk control measures and precautions
		Probability	Severity	
Fall		5		Working platform
Chip in eye		4		Goggles
Dust		3		Use of dust mask
White finger		3		Do not stay working too long Use proper tool for job

Access/egress:

Clearly identify the safe means of access and egress to the workface. (Show on the drawing)

Will general access/egress routes be blocked as a result of the work? If so, what special measures will be taken?

Must have at all times fire escape out to muster point

Hazardous Materials and Substances: clearly identify

- any materials/substances to be used which are 'hazardous' to health
- the key risk(s) to health associated with each material/substance
- the key control measures and precautions to be implemented to control the risks to health

Hazard materials/substances	Risks associated with each material/substance	Control measures and precautions
Concrete dust	Lungs	Dust mask
Scabbler	Deafness	Ear plugs
Hose		

Special Control Measures: identify any work activities that will require special control measures (i.e., permit to work systems, specialist training, specialist equipment, etc.) to be implemented to ensure the adequate protection of employees and/or others against risk of injury.

Activities requiring special control measures	Special control measures
White finger	Use proper tools Use proper gloves Not to work on scabbler too long
Dust	Use dust mask
Eye	Use of goggles
Fall	Use properly fitted tower
Access	Must have safe way in and out

Scenario: Scabbling Project: #2 Team: Contractor

Scope of work: provide a clearly defined description of the work to be undertaken.

- List each activity to be performed in the order in which it is to be performed
- Identify the location at which the activity is to be performed
- Identify the plant and equipment required for each activity
- Identify the tools required for each activity

Act. #	Activity	Location	Plant & Equipment	Tools
1	Access to/from office/parking to place of work. Controlled crossing of road, signs and barriers. Access into excavation, scaffold staircase checked.	Offices / car park	Traffic lights Barriers Access tower/staircase Site electrics	Scaffold tags Hand tools
2	Segregation vehicles/operatives one way system around access road. Barriers around road with pedestrian walkways. Physical barrier around excavation to prevent vehicles entering.	Daylight hours	Barriers 12” x 12” timbers and posts to segregate excavation / road	
3	Inspection of excavation prior to commencing work. Excavation battered back or benched depending on ground conditions	Excavation inspection to be recorded. No access until supervisor ok’s		
4	De-watering excavation. Pump to sealing tank and to site scheme. COSHH (*Control of Substances Hazardous to Health*)	Excavation	4” pump & drip tray Settlement tank Spill kits, rubber gloves	
5	Scabbling kicker and stopend. Pour cleanliness. Cuplock tower for access to vertical stopend. Vibration white finger,	Excavation	Hand/pole scabbler, compressor and hoses with safety chain, drip tray. PPE: gloves, goggles, ear plugs, masks	PPE Scabblers picked with VWF in mind

	rotation, warm gloves			
6	Erect one side of whutter using crane – permit? Stand shutter using push-pulls. Ladder secured/footed to remove chains. Use proper lifting equipment.	Excavation	Pre-fabed shutter Push-pulls Crane and chains (certs) Ladder, lifting eyes	Bolts Hand tools
7	Rebar fixing. Prefab to reduce work at height. All cut ends to be pressed. Caps on protruding steel. Work off cuplock tower with hop-ups.		Rebar Stihl saw and cutting discs Cuplock tower	Knips Tie wire
8	Pour cleanliness. PPE. Barrier off. Damp down kicker to avoid dust.		Compressor and drip tray Spill kit	Air hose Water/buckets
9	Install second shutter. Remove hop-up boards. Ties fixed from cuplock scaffold		As install list	
10	Pre-pour inspection. House-keeping		Access towers	
11	Pour concrete. Access from tower crane and skip. Bankman to control plant movement. VWF.		Crane and skip and certs. Concrete wagon. Banksman. Pokers and power. PPE, wellies, rubber gloves, goggles, ear defenders	

Hazard Identification: clearly identify the hazards that will result from the performance of the work. For each activity, identify the hazard(s) that arise from the performance of the work.

Activity Number	Hazard(s) occurring because of the activity
1	Contact with moving plant and machinery. Slips, trips and falls.
2	Collapse of excavation
3	Scabbling
4	Shutter erection
5	Concrete pouring
6	Cleanliness

Health and Safety Risks and Controls: For each of the hazards identified, clearly identify:

- The key risks to health and safety associated with each hazard
- For each risk, the probability of an accident occurring and, if an accident did occur, the severity of the accident. (Use a scale of 1-5 with 1 being the lowest)
- The key safety control measures and precautions to be implemented to control the health and safety risks

Hazard	Risk	Risk Assessment		Risk control measures and precautions
		Probability	Severity	
Contact with plant/machinery		M	H	Pedestrian segregated walkways. Stop bloc barriers to prevent vehicles accessing excavation education of workforce.
Slips, trips and falls		M	M	Housekeeping – education of workforce
Collapse of excavation		L	H	Inspection daily, recorded weekly by competent person
Drowning		L	H	De-watering of excavation
Environmental	Water run-off	H	M	Settlement tanks, education
Environmental	Powered plant	H	H	Drip trays, spill kits
Scabbling	VWF	H	L	Workforce education, rotation and low vibration tools. PPE – **Not** vibration reducing gloves
Shutter erection and scaffold	Falls from height Collapse Handling	M L M	H H M	Properly erected & inspected scaffold, education Sequenced and checked by TWC Certificated drainage & personnel
Pour cleanliness	Blowing out noise/dust	H	M	PPE & safety zone, education of workforce
Rebar	Manual handling	M	M	Workforce education/mechanical aids
Concrete pouring	Skin contact	M	M	Workforce education, hygiene, barrier cream, PPE

Concrete pouring	Falling objects	L	H	Pump bag secured with chain and clip (same for skipped concrete)
Slips, trips and falls		M	M	Post pour clean up, education of workforce

Access/egress:

Clearly identify the safe means of access and egress to the workface. (Show on the drawing)

Will general access/egress routes be blocked as a result of the work? If so, what special measures will be taken?

Hazardous Materials and Substances: clearly identify

- any materials/substances to be used which are 'hazardous' to health
- the key risk(s) to health associated with each material/substance
- the key control measures and precautions to be implemented to control the risks to health

Hazard materials/substances	Risks associated with each material/substance	Control measures and precautions
Mould release oil	Contact dermatitis	Specify low environmental impact & low hazardous information and PPE
Cement/wet concrete	Contact dermatitis. Cement burns	Education/information. Hygiene facilities, barrier cream, PPE
Petrol/diesel	Contact dermatitis. Flammability	Education/information. Correct storage, hygiene facilities, fire-fighting equipment, PPE
Possible existing contamination	Various	Early identification & isolation. Control measures as required

Special Control Measures: identify any work activities that will require special control measures (i.e., permit to work systems, specialist training, specialist equipment, etc.) to be implemented to ensure the adequate protection of employees and/or others against risk of injury.

Activities requiring special control measures	Special control measures

Scenario: Scabbling Project: #3 Team: Contractor

Scope of work: provide a clearly defined description of the work to be undertaken.

- List each activity to be performed in the order in which it is to be performed
- Identify the location at which the activity is to be performed
- Identify the plant and equipment required for each activity
- Identify the tools required for each activity

Act. #	Activity	Location	Plant & Equipment	Tools
1	Define work area & access egress for materials & resources	Surrounding area	(1) Combisafe barriers for protection (2) Signage to indicate work area/access-egress	Hand tools e.g. adjustable spanner for erection of fence & signage
2	Equipment space requirements working space requirements. Area required to complete work	Wall height of 5m will require scaffold tower	Compressor & scabbling equipment Scaffolding supports for working at height	Adjustable spanners scaffold tag
3	Scaffold tower safety 1) boards laid correctly 2) Toe boards (min 150) 3) Upper guard rail max 910mm height 4) competent operatives to erect and above 5) Scaffold tag to be implemented	Positioned at end of first wall section. Height of tower to suit 5m height	Scaffold, tubes, boards, clips, scafftag	Adjustable spanner Scaffold tubes
4	Safe access to scaffold i.e. secured ladder	On scaffold tower	Ladder	Hand scabbler

	Equipment access i.e. hose & hand scabbler		Compressor At safe working distance Hose not to present trip/fall hazard	
5	Commence scabbling operation *but first – ensure correct ape including protection/gloves, supervision below & signage warning of falling debris, netting provided to minimise.	On scaffold tower At edge of 1st wall	PPE, compressor, hose, scabbler	Hand scabbler
6	Disassemble scaffold tower after completion	End of 1st wall section	Reverse of activity 3	As per activity (3)
7	Scabble kicker of wall	Along kicker of 2nd wall	PPE, compressor, hose, scabbler	Pole scabbler

Hazard Identification: clearly identify the hazards that will result from the performance of the work. For each activity, identify the hazard(s) that arise from the performance of the work.

Activity Number	Hazard(s) occurring because of the activity
1	i) vehicle movements striking operatives/other ii) unauthorised persons walking into work or access area e.g. public, other contractor, other operatives
2	i) Scaffold tower erected incorrectly ii) Working space insufficient iii) Equipment storage presenting a hazard
3	i) Falling from heights ii) Scaffold failure iii) Dropping tools/materials
4	i) Trips, slips, falls, hazard due to hose ii) Compressor obstructing access egress
5	Noise/vibration levels will exceed 85 decibels ?
6	As per 3 above
7	As per 5 above

Health and Safety Risks and Controls: For each of the hazards identified, clearly identify:

- The key risks to health and safety associated with each hazard
- For each risk, the probability of an accident occurring and, if an accident did occur, the severity of the accident. (Use a scale of 1-5 with 1 being the lowest)
- The key safety control measures and precautions to be implemented to control the health and safety risks

Hazard	Risk	Risk Assessment		Risk control measures and precautions
		Probability	Severity	
1 i) ii)	Injury/death Injury/death	Minimal 2	Max 5	Correct signage, barriers & banksmen
2 i) ii) iii)	Equipment failure causing death Operatives injuring self	 2	 3	Plan work area with people carrying out work Laydown areas, equipment, storage, tools
3 i) ii) iii)	Injury, death by falling Injury, death by falling Injury to persons below	1 1 1	5 5 4/5	Competent persons only to erect, inspect, authorise
4 i) ii)	Trip, slip, fall causing injury/ Death Prevention of emergency escape	1 1	5 5	As above Keep escape routes clear, designated
5 noise levels vibration	Permanent damage to hearing Vibration white finger	5	5	Hearing protection. Gloves/rotate operatives. Smallest equipment for job. Tool box, tacks
6 As per activity (3)	3	3	3	3
7 As per activity (5)	5	5	5	5

Access/egress:

Clearly identify the safe means of access and egress to the workface. (Show on the drawing)

Operatives to enter work area by a designated pedestrian route or in crew cabs following the site vehicle road.
Vehicles e.g. dumper to tow in compressor around access road, place compressors safely in designated area & then exit work compound and site via egress road

Will general access/egress routes be blocked as a result of the work? If so, what special measures will be taken?

Work should not obstruct access egress routes unless unavoidable – in extreme cases traffic management should be set up if required

Hazardous Materials and Substances: clearly identify

- any materials/substances to be used which are 'hazardous' to health
- the key risk(s) to health associated with each material/substance
- the key control measures and precautions to be implemented to control the risks to health

Hazard materials/substances	Risks associated with each material/substance	Control measures and precautions
None?		

Special Control Measures: identify any work activities that will require special control measures (i.e., permit to work systems, specialist training, specialist equipment, etc.) to be implemented to ensure the adequate protection of employees and/or others against risk of injury.

Activities requiring special control measures	Special control measures
Permit to work required at all times	Work within site restrictions which should be shown on permit
Control of noise	Noise monitoring

Scenario: Scabbling Project: #1 Team: Operative

Scope of work: provide a clearly defined description of the work to be undertaken.

- List each activity to be performed in the order in which it is to be performed
- Identify the location at which the activity is to be performed
- Identify the plant and equipment required for each activity
- Identify the tools required for each activity

Act. #	Activity	Location	Plant & Equipment	Tools
1	Inspect job Check for hazards Check for steel that may become exposed			
2	Erect scaffold - scaffolders		Scaffold materials	
3	Select scabblers Set up compressor, hoses, and scabblers Check condition of hoses and check for leaks		Compressor, hoses, and scabblers	
4	Scabble vertical surface – start top to bottom			
5	Scabble horizontal surface			
6	Clean up scabbled material from scaffold and ground			
7	Switch off compressor, roll up hoses, and store			

Hazard Identification: clearly identify the hazards that will result from the performance of the work. For each activity, identify the hazard(s) that arise from the performance of the work.

Activity Number	Hazard(s) occurring because of the activity
2	Working at height
4	Vibration Noise Flying particles and dust Working at height
5	Same as #4 except no working at height
6	Flying particles and dust

Health and Safety Risks and Controls: For each of the hazards identified, clearly identify:

- The key risks to health and safety associated with each hazard
- For each risk, the probability of an accident occurring and, if an accident did occur, the severity of the accident. (Use a scale of 1-5 with 1 being the lowest)
- The key safety control measures and precautions to be implemented to control the health and safety risks

Hazard	Risk	Risk Assessment		Risk control measures and precautions
		Probability	Severity	
Working at height	Fall – personal injury	Did not understand	Did not understand	Toolbox talk Wear harness
Vibration	White finger syndrome	Did not understand	Did not understand	Wear gloves Every 5-6 minutes – stop an d exercise fingers, clean glasses
Noise	Loss of hearing Headache	Did not understand	Did not understand	Wear PP E – ear plugs and/or ear muffs
Flying particles and dust	Foreign particle in eye Dust inhalation	Did not understand	Did not understand	Wear PPE – safety glasses and dust masks

Access/egress:

Clearly identify the safe means of access and egress to the workface. (Show on the drawing)

Not an issue

Will general access/egress routes be blocked as a result of the work? If so, what special measures will be taken?

Set off area with barriers

Hazardous Materials and Substances: clearly identify

- any materials/substances to be used which are 'hazardous' to health
- the key risk(s) to health associated with each material/substance
- the key control measures and precautions to be implemented to control the risks to health

Hazard materials/substances	Risks associated with each material/substance	Control measures and precautions
None		

Special Control Measures: identify any work activities that will require special control measures (i.e., permit to work systems, specialist training, specialist equipment, etc.) to be implemented to ensure the adequate protection of employees and/or others against risk of injury.

Activities requiring special control measures	Special control measures
Scabbling	Requires special work permit everyday

Scenario: Scabbling Project: #2 Team: Operative

Scope of work: provide a clearly defined description of the work to be undertaken.

- List each activity to be performed in the order in which it is to be performed
- Identify the location at which the activity is to be performed
- Identify the plant and equipment required for each activity
- Identify the tools required for each activity

Act. #	Activity	Location	Plant & Equipment	Tools
1	Scabble Kicker First	South east foundation wall	Chuck compressor. Compressor and drip tray, air bags, P.P.E.	Scabbler, blow pipe
2	Build scaffold tower to enable stripping 08 step end	South east foundation wall	Erect cup-lock, scaffold for sto rend on existing scab	2. Scaffolders + mate
3	Scaffolder has signed off scaffold to be safe for operatives to strip stop end	South east foundation wall	P.P.E.	Hammer, nail bar, pair CE nips
4	Scabble stop end	South east foundation wall	Compressor + drip tray, P.P.E.	Scabbler
5	Strip scaffold tower + stack materials in a safe manner	South east foundation wall	P.P.E.	2 scaffolders + mate
6	Blow debris from kicker	South east foundation wall	Compressor + drip tray, air bags, P.P.E.	Scabbler, blow pipe

Hazard Identification: clearly identify the hazards that will result from the performance of the work. For each activity, identify the hazard(s) that arise from the performance of the work.

Activity Number	Hazard(s) occurring because of the activity
1	Dust and noise
2	Barrier job off to prevent any unauthorized access. Scaffolder wore harnesses while erecting scaffold
3	Falling materials
4	Falling debris - concrete
5	Scaffolders wore harnesses while dismantling scaffold

Health and Safety Risks and Controls: For each of the hazards identified, clearly identify:

- The key risks to health and safety associated with each hazard
- For each risk, the probability of an accident occurring and, if an accident did occur, the severity of the accident. (Use a scale of 1-5 with 1 being the lowest)
- The key safety control measures and precautions to be implemented to control the health and safety risks

Hazard	Risk	Risk Assessment		Risk control measures and precautions
		Probability	Severity	
Dust	Somebody could get dust in their eyes	3	5	Warn other operatives to stay clear off area
Falling objects	On the off chance could get hit	1	5	Do not cross area which was barriered off
Noise	Deafness	2	5	Wear ear plugs

Access/egress:

Clearly identify the safe means of access and egress to the workface. (Show on the drawing)

Will general access/egress routes be blocked as a result of the work? If so, what special measures will be taken?

Designated walkway from path to slab. See drawing.

Hazardous Materials and Substances: clearly identify

- any materials/substances to be used which are 'hazardous' to health
- the key risk(s) to health associated with each material/substance
- the key control measures and precautions to be implemented to control the risks to health

Hazard materials/substances	Risks associated with each material/substance	Control measures and precautions
Di + carbon dioxide from compressor	Inhalation of carbon dioxide could be fatal. Diesel spillage could cause	Dust mask, drip trays, gloves Diesel fumes away from work area
Dust	Dust could enter eyes and lungs	Dust mask and goggles

Special Control Measures: identify any work activities that will require special control measures (i.e., permit to work systems, specialist training, specialist equipment, etc.) to be implemented to ensure the adequate protection of employees and/or others against risk of injury.

Activities requiring special control measures	Special control measures
Movement of compressors	Trained to carry out crane
Scffikd	Trained scaffolder

Hazardous Materials and Substances: clearly identify

- any materials/substances to be used which are 'hazardous' to health
- the key risk(s) to health associated with each material/substance
- the key control measures and precautions to be implemented to control the risks to health

Hazard materials/substances	Risks associated with each material/substance	Control measures and precautions
Diesel and carbon dioxide from compressor	Inhalation of CO2 could be fatal. Diesel spill could cause dermatitis.	Dust mask, drip trays, gloves. Diesel fumes away from work area.
Dust	Dust could enter eyes and lungs	Dust mask and goggles.

Special Control Measures: identify any work activities that will require special control measures (i.e., permit to work systems, specialist training, specialist equipment, etc.) to be implemented to ensure the adequate protection of employees and/or others against risk of injury.

Activities requiring special control measures	Special control measures
Movement of compressors	Trained banksmen to carry out crane lifts
Erect scaffold	Trained scaffolder

Scenario: Scabbling Project: #3 Team: Operative

Scope of work: provide a clearly defined description of the work to be undertaken.

- List each activity to be performed in the order in which it is to be performed
- Identify the location at which the activity is to be performed
- Identify the plant and equipment required for each activity
- Identify the tools required for each activity

Act. #	Activity	Location	Plant & Equipment	Tools
1	Scabble top of kicker & end face of wall both 350mm wide	SEE SHEETS	Compressor & hoses, scaffolding, ladders, safety harness	Hand & pole scabbler, broom & shovel
2	Identify the risks, place barrier around work place, scabble kicker, erect scaffolding & scabble face of wall, clean & tidy up			
3				
4				

Hazard Identification: clearly identify the hazards that will result from the performance of the work. For each activity, identify the hazard(s) that arise from the performance of the work.

Activity Number	Hazard(s) occurring because of the activity
1	Concrete in eyes, white finger vibration, noise, dust, falling from heights, people working below

Health and Safety Risks and Controls: For each of the hazards identified, clearly identify:

- The key risks to health and safety associated with each hazard
- For each risk, the probability of an accident occurring and, if an accident did occur, the severity of the accident. (Use a scale of 1-5 with 1 being the lowest)
- The key safety control measures and precautions to be implemented to control the health and safety risks

Hazard	Risk	Risk Assessment		Risk control measures and precautions
		Probability	Severity	
Concrete in eyes	5		5	Wear safety goggles
White finger vibration	2	2		Wear anti-vibration gloves
Noise	1	1		Wear ear defenders
Dust	4		4	Wear dust mask
Falling from height	5		5	Wear safety harness if needed
People working below	4		4	Place barrier suitable distance from workplace

Access/egress:

Clearly identify the safe means of access and egress to the workface. (Show on the drawing)

Will general access/egress routes be blocked as a result of the work? If so, what special measures will be taken?

NO

Hazardous Materials and Substances: clearly identify

- any materials/substances to be used which are 'hazardous' to health
- the key risk(s) to health associated with each material/substance
- the key control measures and precautions to be implemented to control the risks to health

Hazard materials/substances	Risks associated with each material/substance	Control measures and precautions
NONE		

Special Control Measures: identify any work activities that will require special control measures (i.e., permit to work systems, specialist training, specialist equipment, etc.) to be implemented to ensure the adequate protection of employees and/or others against risk of injury.

Activities requiring special control measures	Special control measures
Permit to work, trained scaffolders, first aider	Safety goggles, anti vibration gloves, dust masks, safety helmet, boots, ear defenders, first aider, safety harness, crowd control barrier

Scenario #3 – Excavation/Pipe Installation

Scenario: Excavation/Pipe Project: #1 Team: Contractor

Scope of work: provide a clearly defined description of the work to be undertaken.

- List each activity to be performed in the order in which it is to be performed
- Identify the location at which the activity is to be performed
- Identify the plant and equipment required for each activity
- Identify the tools required for each activity

Act. #	Activity	Location	Plant & Equipment	Tools
1	Reduce ground to depth of 1.5m at width of 1.5m and sides battered back at 45 degrees along the length of excavation within the site. Double handrail around length of excavation.	From beginning of new manhole to 1.5m short of access road.	EX 130, Compressor	FL 22, Clay spades, shovels, pipe.
2	Excavate the remaining 2m, using experienced miners to install trench sheets and horizontal props to hold up the sides. Clay will be excavated by an EX 171 sitting in the trench and miners using clay spades.	From beginning of new manhole to 1.5m short of access road.	EX 130, Compressor, EX 171, 2.5m long trench sheets and shackle, gas monitor, 2 x 10min breathing set , rescue hoist.	FL 22, Clay spade, shovel, pipe.
3	Construct a heading underneath access road, using a timber constructed frame.	Access road.	8 x 4 timber headtrees, 2 sills, 225mm x 50mm polling boards, timber wedges, gas monitor, 10” breathing set, air ventura, lighting.	Skill saw, clay spade, shovels, pipe.
4	Repeat activities 122 from the other side of the access road to the existing manhole. But before starting, ensure work area is	See plan	Same as 1 & 2	Same as 1 & 2

	completely blocked off and all access to parking and offices are clearly identified.			
5	Lay 150mm bedding, using 130 excavator to install gravel.	Entire length of pipe.	EX 130, tipper, wacker plate	Pipe
6	Construct manhole (1) and lay pipe to manhole (2) by experienced pipe fitters. Construct manhole (2) and lay pipe to existing manhole. Pipes are lowered into trench using EX 130.	Along entire length of pipe.	EX 130, manhole rings, concrete pipes, concrete skip.	Hackle, lifting strops.
7	Backfill pipe with excavated material at 300mm lifts and compacted with wacker plate	Along entire length of pipe.	EX 130, wacker plate.	
8	Place 150mm pea gravel on top of pipe and compact using wacker plate, backfill rest of trench in lifts of 300mm and compact. Remove excess spoil.	Along entire length of pipe.	EX 130, wacker plate, tipper	

Hazard Identification: clearly identify the hazards that will result from the performance of the work. For each activity, identify the hazard(s) that arise from the performance of the work.

Activity Number	Hazard(s) occurring because of the activity
1	Collapse of excavation sides
2	Collapse of excavation sides, confined space
3	Collapse of excavation, confined space
4	Same as activity 1 & 2
5	Excavator working in close proximity to trench and men
6	Lifting of manhole rings & pipes, dangers of lifting operations
7	Excavator working in proximity to men, vibration of wacker plate
8	Same as above

Health and Safety Risks and Controls: For each of the hazards identified, clearly identify:

- The key risks to health and safety associated with each hazard
- For each risk, the probability of an accident occurring and, if an accident did occur, the severity of the accident. (Use a scale of 1-5 with 1 being the lowest)
- The key safety control measures and precautions to be implemented to control the health and safety risks

Hazard	Risk	Risk Assessment		Risk control measures and precautions
		Probability	Severity	
Collapse of excavation	Collapse of clay	1	5	Excavation battered back at 45 degrees
Confined Spaces	Gas Collapse of sides	2 1	4 5	Gas monitor, 10min breathing set, rescue hoist, trench sheets and props.
Excavator in close proximity to trench 2 men	Excavator could fall in trench & man could be hit by bucket or machine	1 1	5 5	Timber bollard at safe working distance from trench. Banksmen at all times
Lifting Operations	Objects falling	1	4	Trained banksmen to sling loads, and men to not be standing in trench when pipe lifted in.
Vibration	White finger	3	3	Anti vibration gloves, only short periods of operation.

Access/egress:

Clearly identify the safe means of access and egress to the workface. (Show on the drawing)

Will general access/egress routes be blocked as a result of the work? If so, what special measures will be taken?

If blocked, a new scaffold access will be erected

Hazardous Materials and Substances: clearly identify

- any materials/substances to be used which are 'hazardous' to health
- the key risk(s) to health associated with each material/substance
- the key control measures and precautions to be implemented to control the risks to health

Hazard materials/substances	Risks associated with each material/substance	Control measures and precautions
Cement/concrete	Inhalation, eye penetration	Dust masks, goggles
Dust	Inhalation, eye penetration	Dust masks, goggles, water extraction fans

Special Control Measures: identify any work activities that will require special control measures (i.e., permit to work systems, specialist training, specialist equipment, etc.) to be implemented to ensure the adequate protection of employees and/or others against risk of injury.

Activities requiring special control measures	Special control measures
Confined spaces	Confined space permit
General site work	Permit to work & permit to dig

Scenario: Excavation/Pipe Project: #2 Team: Contractor

Scope of work: provide a clearly defined description of the work to be undertaken.

- List each activity to be performed in the order in which it is to be performed
- Identify the location at which the activity is to be performed
- Identify the plant and equipment required for each activity
- Identify the tools required for each activity

Act. #	Activity	Location	Plant & Equipment	Tools
1	Site set up 2 layers of EDE protection should be set up 1) work area protection 2) leading edge of trench protection	Along section of drainage being worked on. Lengths of sections to be chosen	Comisafe barriers, heras fencing or other	Adjustable spanners
2	Excavation of manholes MH (1) MH (2) *CS Procedures	On attached drawing	360 degrees hydraulic excavator dumper	Hand shovels, hand tools etc
3	Construction of manholes *confined space procedures	On attached drawing	360 degrees hydraulic excavator to lift in precast rings *CS equipment	Hand tools
4	Connection into existing manholes *confined space procedures *most form crash deck	On attached drawing	Compressor generator, core drill/saw *CS equipment	Carpenter tools Hand tools

5	Excavation of trenches *confined space procedure	On attached drawing to be completed in sections	360 degrees hydraulic excavator dumper	Hand shovels Hand tools
6	Installation of pipe & bedding *confined space required	On attached drawing	360 degrees machine	Hand shovel/tools
7	Backfill reinstatement	AS above	360 degrees machine	Hand tools
8	Drainage crossing road requires traffic management	On Drawing	Road signage, barriers, supervision	

Hazard Identification: clearly identify the hazards that will result from the performance of the work. For each activity, identify the hazard(s) that arise from the performance of the work.

Activity Number	Hazard(s) occurring because of the activity
1	A) vehicles striking operatives B) Unauthorised persons walking into area
2	A) Striking/damage to existing services B) Machine hitting striking personal C) Sides of excavation collapsing
3	A) Falling materials B) Excavation collapsing C) Toxic gas build up or oxygen deflection D) Vehicles falling into excavation
4	A) Dust/gas build up B) Sparks – ignited C) Injury caused by cutting/breaking tool D) Contamination of existing drainage E) Falling materials
5	A) Striking/damage to existing services B) Machine striking persons C) Sides of excavation collapse

	D) Machine falling into excavation
6	A) Build up of gas/oxygen deflection B) Trench collapse C) Falling materials
7	A) Vehicles striking operatives
8	A) Vehicles striking ops or damaging works

Health and Safety Risks and Controls: For each of the hazards identified, clearly identify:

- The key risks to health and safety associated with each hazard
- For each risk, the probability of an accident occurring and, if an accident did occur, the severity of the accident. (Use a scale of 1-5 with 1 being the lowest)
- The key safety control measures and precautions to be implemented to control the health and safety risks

Hazard	Risk	Risk Assessment		Risk control measures and precautions
		Probability	Severity	
1A 1B	Injury or death Injury or death	2 2	5 5	Banksmen, signage, barriers, clear signage
2A	Severe leak, flood Explosion electrician	5 5	5 5	Full desktop survey of available data, cat scan survey, operatives briefed on service clearance. Historical records, hand dig if in doubt
2B	Injury or death	3	5	Machine banked at all times
2C	A) Machines or persons falling into excavation B) Persons buried	4	5	Progressive trench support sheet piles or preferably trench box
3A	Striking of operatives working below	3	5	Toe board on leading edge trench protection
3B	Vehicles, plant ops falling into excavation	3	5	Progressive trench support either sheet piles or trench box

3C	Suffocation, explosion, death/injury	4	5	Full CS Procedures – gas monitor for O2, CO, H2S, CH4, escape sets & breathing apparatus, tripod, harness, winch operatives
4D	Blockage to system	4	4	Form crash deck inside live manhole to prevent debris or other material falling into system
4A	Same as 3C	4	5	CS Procedures as above
4B	Fire, explosion if gas present	5	5	Hot works permit in place, extinguishers present. Gas monitor → confined space
4C	Injury	3	4	Only competent operatives to use tool. Tools checked prior to use
Machine falling into excavation	Injury death	2	5	Stop blocks on equipment, fencing, barriers where possible
Vehicles striking ops or works	Injury, death, damage to works	4	5	Traffic management or revert to nights

Access/egress:

Clearly identify the safe means of access and egress to the workface. (Show on the drawing)

Access egress should be via pedestrian walkways for operatives
Note work area will move progressively. Vehicles will drop materials at storage points shown on drawings
Site vehicles will then pick up and take workface

Will general access/egress routes be blocked as a result of the work? If so, what special measures will be taken?

Traffic management at road interface required

Hazardous Materials and Substances: clearly identify

- any materials/substances to be used which are 'hazardous' to health
- the key risk(s) to health associated with each material/substance
- the key control measures and precautions to be implemented to control the risks to health

Hazard materials/substances	Risks associated with each material/substance	Control measures and precautions
Concrete	Burns	PPE gloves, boots
Diesel	Flammable	Bundled, spillage granules provided
Spray	Flammable Toxic	Cans disposed of correctly

Special Control Measures: identify any work activities that will require special control measures (i.e., permit to work systems, specialist training, specialist equipment, etc.) to be implemented to ensure the adequate protection of employees and/or others against risk of injury.

Activities requiring special control measures	Special control measures
Cutting	Hot works permits
Working in excavations	Confined space procedures
Road interface	Traffic management

Scenario: Excavation/Pipe Project: #3 Team: Contractor

Scope of work: provide a clearly defined description of the work to be undertaken.

- List each activity to be performed in the order in which it is to be performed
- Identify the location at which the activity is to be performed
- Identify the plant and equipment required for each activity
- Identify the tools required for each activity

Act. #	Activity	Location	Plant & Equipment	Tools
1	Preparation – refer to stats, drawings & temp services way out, locate services & trial hole. Arrange diversion or disconnection of services (by others), arrange diversion if required, fence off work area, issue relevant permits (die & confined space), correct PPE for operations		Drawings & staff auth Cable detector Fencing	
2	Level off working platform by grading area of work & place arisines safe distance from area of work (away from elevation)	Complete drain run	360 degree excavator	N/A
3	Commence excavation @ existing manhole to 150mm below design pipe invert level, length of excavation allow for (length of trench boxes to be installed) & lift boxes into position	Existing manhole	360 degrees excavator trench boxes, gas detector, pump (standby) (min 2N' boxes) Dumper (6T)	Surplus material loaded to dumper and removed away from trench (to set down arba??)
4	Provide ladder access into box, secured at top	Existing manhole	Gas detector. Ladder access to both	Mechanical Breaker

	and bottom. Break into manhole		manhole and trench box.	
5	Lower bedding material into base of trench. Level off bedding material to correct level (manually) lift pipe into position and check, set laser in pipe	Existing manhole	360^0 excavator, certified slings within SWL and pea gravel	Shovel
6	Surround pipe with pea gravel to half barrel and lift box to this height, place pea gravel to 150mm above pipe and again lift box to this height		360^0 excavator lifting apparatus	
7	Place first layer of backfill material. Lift wacker into trench, compact layer of backfill as required by spec, remove wacker from trench (repeat and lift trench box as work progresses)		Wacker plate, 360^0 excavator (lift in materials) chains (lifting apparatus)	
8	Lift second pipe into position c/w rubber seal and push pipe into socket of previously laid pipe (and repeat steps 3-8 until next m/h is reached)	Ex M/H → 1st new M/H	360^0 excavator slings laser (to check line and level) pump (for any water in trench)	Pinch bar Shovels
9	Excavate M/H to O/S concrete level and install M/H box, place concrete to 50mm above soffit of pipe and channel and form channel in concrete for M/H invert	First new M/H	Concrete 360^0 excavator	Shovel
10	Lift base ring onto concrete and bed Place further rings to desired level – sealing bond between each ring, place cover slab,		360^0 excavator Lifting chains and eye bolts	

	close off slab opening to eliminate falling into m/h			
11	Remove m/h box. For next run between new m holes – repeat steps 3-10			

Hazard Identification: clearly identify the hazards that will result from the performance of the work. For each activity, identify the hazard(s) that arise from the performance of the work.

Activity Number	Hazard(s) occurring because of the activity
1	This activity eliminates the risk of striking or damaging any existing services
2	Eliminates risk of plant over turning
3	Ingress of water – running sand. Collapse of trench
4	Gases, dust and debris in eyes
5	Striking operatives with plant/material
6	Striking operatives with plant/material
7	As 5 & 6
8	Trapping of operative (as 5 & 6) – trapping fingers in slings etc
9	As 5 & 6
10	As 5 & 6
11	As 5 & 6

Health and Safety Risks and Controls: For each of the hazards identified, clearly identify:

- The key risks to health and safety associated with each hazard
- For each risk, the probability of an accident occurring and, if an accident did occur, the severity of the accident. (Use a scale of 1-5 with 1 being the lowest)
- The key safety control measures and precautions to be implemented to control the health and safety risks

Hazard	Risk	Risk Assessment		Risk control measures and precautions
		Probability	Severity	
Exist services	Striking, damaging, injury/death	3	5	Liase with stats, drawings to be checked, cat detection, trial hole and mark
Overturning plant	Injury/death	2	5	Level ground. Banksmen in attendance
Water ingress	Trench collapse	5	5	Pump in place. Trench support system
Gas. Dust, debris	Asphyxiation, eye injury, inhalation.	4	4	Breathing apparatus. Gas detection – confined space training. Eye protection
Striking op's	Injury/death	3	5	Banksman in attendance. Correct slinging and signaling. Co-coordinated tipping
Trapping fingers	Injury	3	3	Wear safety gloves. Correct slinging and signaling

Access/egress:

Clearly identify the safe means of access and egress to the workface. (Show on the drawing)

Will general access/egress routes be blocked as a result of the work? If so, what special measures will be taken?

Yes – alternative route to be signed and work face isolated by fence lines.

Hazardous Materials and Substances: clearly identify

- any materials/substances to be used which are 'hazardous' to health
- the key risk(s) to health associated with each material/substance
- the key control measures and precautions to be implemented to control the risks to health

Hazard materials/substances	Risks associated with each material/substance	Control measures and precautions
Concrete	Dermatitis. Line burns	PPE – gloves, goggles, footwear
Tokstrip	Bituminous to hands	Gloves
Gases	Asphyxiation	Breathing apparatus
Dust	Inhalation	Masks required
Diesel	Dermatitis	Gloves, goggles

Special Control Measures: identify any work activities that will require special control measures (i.e., permit to work systems, specialist training, specialist equipment, etc.) to be implemented to ensure the adequate protection of employees and/or others against risk of injury.

Activities requiring special control measures	Special control measures
Excavating	Permit to dig
Working in existing m/h	Permit to enter confined spaces
Certification of operatives	CITB training etc

Scenario: Excavation/Pipe Project: #1 Team: Operative

Scope of work: provide a clearly defined description of the work to be undertaken.

- List each activity to be performed in the order in which it is to be performed
- Identify the location at which the activity is to be performed
- Identify the plant and equipment required for each activity
- Identify the tools required for each activity

Act. #	Activity	Location	Plant & Equipment	Tools
1	Layout job Mark off area to keep unauthorized persons out			
2	Excavate for manhole using manhole box		Excavator Dumper for topsoil removal Manhole box – use excavator if possible, if not use crane	Shovels and general tools
3	Excavate trench using trench box		Trench box	
4	Inspect trenches			
5	Install ladders – secure manhole & trench		Ladders	
6	Place bedding	Tipped to one side	Dumper Loader	Shovel
7	Setup lines – lay pipe			
8	Place manhole bases		Crane	
9	Place bedding			
10	Place manhole rings		Excavator or crane	

11	Backfill manhole wit concrete		Crane & skip	
12	Backfill trenches in 300m lifts – lift trench boxes			Whacker
13	Finish surface			
14	Remove excess soil			

Hazard Identification: clearly identify the hazards that will result from the performance of the work. For each activity, identify the hazard(s) that arise from the performance of the work.

Activity Number	Hazard(s) occurring because of the activity
2, 3	Struck by equipment Cave in
4	Cave in
5	Fall
6, 9	Struck by falling material
8, 10	Working with concrete
11	Struck by equipment

Health and Safety Risks and Controls: For each of the hazards identified, clearly identify:

- The key risks to health and safety associated with each hazard
- For each risk, the probability of an accident occurring and, if an accident did occur, the severity of the accident. (Use a scale of 1-5 with 1 being the lowest)
- The key safety control measures and precautions to be implemented to control the health and safety risks

Hazard	Risk	Risk Assessment		Risk control measures and precautions
		Probability	Severity	
Noise	Deafness			Wear ear protection (plugs and muffs)
Cave ins	Personal injury			Use manhole and trench boxes
Struck by equipment	Personal injury			Set up barriers to keep unauthorized persons out of area
Fall	Personal injury			Inspect ladders Secure ladders
Struck by falling material	Personal injury			Make sure men in trench are kept safe distanced away
Flying particles and dust	Foreign particle in eye			Wear eye protection
Working with concrete	Cement dermatitis			Wear gloves
Material handling	Personal injury			Wear gloves

Access/egress:

Clearly identify the safe means of access and egress to the workface. (Show on the drawing)

Secure ladders

Will general access/egress routes be blocked as a result of the work? If so, what special measures will be taken?

Block off main access road, require traffic to use perimeter road
If not, use tunneling method

Hazardous Materials and Substances: clearly identify

- any materials/substances to be used which are 'hazardous' to health
- the key risk(s) to health associated with each material/substance
- the key control measures and precautions to be implemented to control the risks to health

Hazard materials/substances	Risks associated with each material/substance	Control measures and precautions
Cement	Cement dermatitis	Gloves
Joint ring grease		Gloves

Special Control Measures: identify any work activities that will require special control measures (i.e., permit to work systems, specialist training, specialist equipment, etc.) to be implemented to ensure the adequate protection of employees and/or others against risk of injury.

Activities requiring special control measures	Special control measures
Working in trench or manhole	Work permit

Scenario: Excavation/Pipe Project: #2 Team: Operative

Scope of work: provide a clearly defined description of the work to be undertaken.

- List each activity to be performed in the order in which it is to be performed
- Identify the location at which the activity is to be performed
- Identify the plant and equipment required for each activity
- Identify the tools required for each activity

Act. #	Activity	Location	Plant & Equipment	Tools
1	Excavate trench, place trench boxes. Lay pipes on shingle bed & surround, backfill & compact, pull trench boxes	SEE SHEETS	Track machine, trench boxes, pea shingle, pipes, strop, set of chains, dumper	Shovels, laser level, compactor plate, ladders, cat scan
2	Excavate trench, place trench boxes, lay pipes on shingle bed & surround. Backfill & compact, pull trench boxes, reinstate road	SEE SHEETS	Track machine with breaker, trench boxes, pea shingle, pipes, strop, set of chains, dumper	Shovels, laser level, compactor plate, ladder, cat scan
3	Excavate trench, place trench boxes and manhole box, lay pipes on shingle bed and surround, place manhole rings, concrete surround, backfill & compact, pull trench boxes concrete base for manhole rings	SEE SHEETS	Track manhole, trench boxes manhole box, pea shingle, pipes, strop, chains, dumper, manhole shutter, steel for manhole base, concrete	Shovels, laser level, compactor plate, electric poker, ladders, cat scan
4	Excavate trench place boxes, lay pipe on shingle bed & surround backfill & compact, pull boxes & manhole box, place lid on manhole rings, concrete surround manhole	SEE SHEETS	Track machine, trench boxes, manhole box, pea shingle, pipes, strop, chains, dumper, manhole shutter, concrete	Shovels, laser level, compactor plate, ladders, cat scan

5	Excavate trench, place trench boxes & manhole box, lay pipes on shingle bed & surround, concrete manhole base place rings, shutter, concrete, backfill & compact. Remove boxes, place cover on manhole, bench manholes	SEE SHEETS	Track machine, trench boxes, manhole box, pea shingle, pipes, strop, chains, dumper, manhole shutter, steel, concrete	Shovels, laser level, compactor plate, electric poker, ladders, cat scan

Hazard Identification: clearly identify the hazards that will result from the performance of the work. For each activity, identify the hazard(s) that arise from the performance of the work.

Activity Number	Hazard(s) occurring because of the activity
1	Falling down trench, confined space, hit by machine, dumper by edge, underground services

Health and Safety Risks and Controls: For each of the hazards identified, clearly identify:

- The key risks to health and safety associated with each hazard
- For each risk, the probability of an accident occurring and, if an accident did occur, the severity of the accident. (Use a scale of 1-5 with 1 being the lowest)
- The key safety control measures and precautions to be implemented to control the health and safety risks

Hazard	Risk	Risk Assessment		Risk control measures and precautions
		Probability	Severity	
Falling down trench	3		3	Place edge protection
Confined space	4		4	Gas monitor
Hit by machine	4		5	Stay out of swing arc
Dumper by edge of trench	4		5	Solid barrier 1 meter from edge
Underground services	5		1	Cat scan area, look at service drawings

Access/egress:

Clearly identify the safe means of access and egress to the workface. (Show on the drawing)

Will general access/egress routes be blocked as a result of the work? If so, what special measures will be taken?

Yes, diversions put in place

Hazardous Materials and Substances: clearly identify

- any materials/substances to be used which are 'hazardous' to health
- the key risk(s) to health associated with each material/substance
- the key control measures and precautions to be implemented to control the risks to health

Hazard materials/substances	Risks associated with each material/substance	Control measures and precautions
Concrete	Concrete burns, eyes	Gloves, goggles
Diesel	Flammable	Bowser, or bunded area

Special Control Measures: identify any work activities that will require special control measures (i.e., permit to work systems, specialist training, specialist equipment, etc.) to be implemented to ensure the adequate protection of employees and/or others against risk of injury.

Activities requiring special control measures	Special control measures

Scenario: Excavation/Pipe Project: #3 Team: Operative

Scope of work: provide a clearly defined description of the work to be undertaken.

- List each activity to be performed in the order in which it is to be performed
- Identify the location at which the activity is to be performed
- Identify the plant and equipment required for each activity
- Identify the tools required for each activity

Act. #	Activity	Location	Plant & Equipment	Tools
1	Check for underground services. Permit for excavations		Cat & Jenny Safety equipment	Testing equipment Screwed stoppers
2	Barricade of for excavations	Barricade 50 meters from existing manhole	Shoring, sheet piles or drag boxes, manhole box	Laser for laying pipes, hand digging tools
3	Break into existing manhole		Machine & dumper whacker plate	Compressor, air hammer, ladder, ear defenders
4	Cones & signs for road crossing, traffic lights if required			Flour saw for cutting tat for road crossing

Hazard Identification: clearly identify the hazards that will result from the performance of the work. For each activity, identify the hazard(s) that arise from the performance of the work.

Activity Number	Hazard(s) occurring because of the activity

Health and Safety Risks and Controls: For each of the hazards identified, clearly identify:

- The key risks to health and safety associated with each hazard
- For each risk, the probability of an accident occurring and, if an accident did occur, the severity of the accident. (Use a scale of 1-5 with 1 being the lowest)
- The key safety control measures and precautions to be implemented to control the health and safety risks

Hazard	Risk	Risk Assessment		Risk control measures and precautions
		Probability	Severity	
Machine excavating	Walking into signing area	Very small	5	Use banksmen at all times & keep well barricaded
Excavation	Falling into track	Very small	3	Keep upright with backfilling & fencing off
Laying pipe	Pipe falling from sling	Very small	5	Competent slinger & banksmen & proper equipment

Access/egress:

Clearly identify the safe means of access and egress to the workface. (Show on the drawing)

Will general access/egress routes be blocked as a result of the work? If so, what special measures will be taken?

Hazardous Materials and Substances: clearly identify

- any materials/substances to be used which are 'hazardous' to health
- the key risk(s) to health associated with each material/substance
- the key control measures and precautions to be implemented to control the risks to health

Hazard materials/substances	Risks associated with each material/substance	Control measures and precautions
Concrete	Dermatitis	Wear rubber gloves & barrier cream if available
Bitumen primer		Wear rubber gloves & barrier cream if available

Special Control Measures: identify any work activities that will require special control measures (i.e., permit to work systems, specialist training, specialist equipment, etc.) to be implemented to ensure the adequate protection of employees and/or others against risk of injury.

Activities requiring special control measures	Special control measures
Breaking into existing manhole	Confined spaces ticket